April 2007

Reduced Voltage Motor Starters

Contents

Description	*Page*
Type S811, Intelligent Technologies *(IT.)* Soft Starters with DIM	
Product Description	2
Application Description	2
Features and Benefits	4
Operation	7
Catalog Number Selection	8
Product Selection	9
Options	19
Accessories	19
Standards and Certifications	20
Instructional Leaflets	20
Technical Data and Specifications	21
Dimensions	22
***IT.* Solid-State Soft Starters — Enclosed**	
Product Family Overview	25
Cover Control	26
Catalog Number Selection	27
Non-combination	
Product Selection	28
Combination with Fusible Disconnect	
Product Selection	29
Combination with Breaker	
Product Selection	30
Dimensions	31

Note: Supplement to Publication No. CA08102001E — Tab 39.

S811 IT. Soft Starter

Contents

Description *Page*

Type S811, Intelligent Technologies *(IT.)* Soft Starters with DIM

Product Description 2
Application Description 2
Features and Benefits 4
Operation 7
Catalog Number Selection 8
Product Selection 9
Options 19
Accessories 19
Standards and Certifications 20
Instructional Leaflets 20
Technical Data and Specifications 21
Dimensions 22

S811 Open Soft Starter

Product Description

Eaton's Cutler-Hammer® ***IT.*** S801 revolutionized the reduced voltage control marketplace with its advanced feature set and small size. In fact, readers of an industry leading control publication rated Cutler-Hammer Soft Starters best in customer satisfaction in March 2004 and April 2006. The new ***IT.*** S811 from Eaton's electrical business offers all the popular features of the S801, but adds enhanced functionality with the new DIM (Digital Interface Module), communications, metering, monitoring and diagnostics capabilities.

The Cutler-Hammer Intelligent Technologies (***IT.***) Line of S811 Reduced Voltage Soft Starters is very compact, multi-functional, easy to install and easy to program. Designed to control the acceleration and deceleration of three-phase motors up to 690V, the line is available from 11 amps through 1,000 amps.

The S811 is designed to be a complete package combining the SCRs, bypass contactor and overload in one, very compact unit. The S811 is available as a component for panel mounting, in motor control centers or in enclosed control (NEMA Type 1, 3R, 4, 4X, 7/9 and 12).

Application Description

Designed to control the acceleration and deceleration of three-phase motors, the ***IT.*** S811 soft starter uses Silicon Controlled Rectifiers (SCRs) to control the voltage to soft start and soft stop the motor. After the motor is started, internal run bypass contactors close, resulting in the motor running directly across-the-line. The built-in solid-state overload protects the motor from overload conditions with sophisticated algorithms that model true motor heating, resulting in better motor protection and fewer nuisance trips. Advanced protective and diagnostic features reduce downtime.

A voltage ramp start or current limit start is available. Kick start is available in either starting mode. The soft stop option allows for a ramp stop time that is longer than the coast to stop time. The pump control option provides a smooth transition for starting and stopping a motor and eliminating the "water-hammer" effect that can damage pipes, valves and pumps.

The S811 offers an impressive array of advanced protective features. Not only are the protective features selectable, but many offer variable settings allowing the user to fine tune the starter to meet specific system requirements.

The S811 has an easy to use Digital Interface Module (DIM) that allows the user to configure the device and to read system parameters. The DIM includes an LCD display and keypad to scroll through the various menus. The DIM allows the user to modify control parameters, enable or disable protections, set communication variables, monitor system parameters such as line voltages and currents, and access the fault queue.

Figure 1. Digital Interface Module (DIM)

The DIM can be removed from the S811 and remote mounted. Kits are available to door mount the DIM, enabling users to safely configure, commission, monitor and troubleshoot the system at the electrical panel without opening the enclosure door. This will help eliminate the possibility of an arc flash incident.

Communications

The S811 has built-in communication capabilities through Cutler-Hammer QC (Quick Connect) Port. QCPort enables the soft starter to be connected to a variety of networks, including DeviceNet™, EtherNet/Modbus, EtherNet/IP and PROFIBUS. The advantage of QCPort is that multiple control components can be connected to one Cutler-Hammer ***IT.*** D77D gateway. The gateway concentrates data from the devices into a single node. Configuration is simple — a single press of the gateway's Auto Configuration button sets the system up for default operation. This automatically configures the I/O assemblies to the QCPort system devices. The data from these devices are then assembled into single input and output messages.

The S811 communication parameters can be configured with the DIM or through the fieldbus using CH Studio Component Manager. Advanced communication configuration settings provide the system integrator with powerful tools to facilitate system optimization.

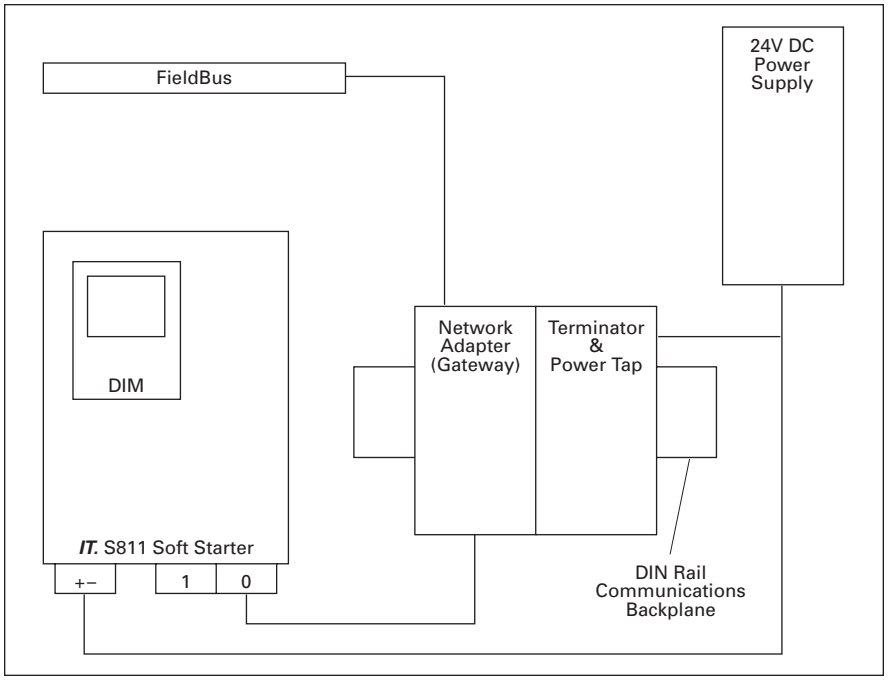

Figure 2. S811 Connection Diagram

Table 1. Communications Reference

Description	Part Number	Catalog Page
DeviceNet Network Adapter	**D77D-DNA**	①
EtherNet Modbus Network Adapter	**D77D-EMA**	①
EtherNet/IP Network Adapter	**D77D-EIP**	①
PROFIBUS Network Adapter	**D77D-PNA**	①
Terminator and Power Tap	**D77E-QPLR**	①
DIN Rail Communications Backplane, 7-position	**D77E-BP7**	①
DIN Rail Communications Backplane, 12-position	**D77E-BP12**	①
24V DC Power Supply (120V AC Input)	**PSS55A**	②
24V DC Power Supply (240V AC Input)	**PSS55B**	②
24V DC Power Supply (480V AC Input)	**PSS55C**	②

① See Tab 50 of CA08102001E.
② See Tab 44 of CA08102001E.

Features and Benefits

- The DIM (Digital Interface Module) provides an intuitive, easy-to-use human interface with powerful configuration capabilities to maximize system performance.
- Door or device mounted DIM enables users to safely configure, commission, monitor and troubleshoot the system at the electrical panel without opening the enclosure door, eliminating the possibility of an arc flash incident.
- System operating parameters can be monitored enterprise-wide through a communications network. Increase uptime by providing data for process management and preventive diagnostics.
- Run bypass mode greatly reduces internal heating created by the greater power dissipation in the SCRs. Bypass contactor directly connects the motor to the line and improves system efficiency by reducing internal power losses.
- Internal solid-state overload protection provides accurate current measurement and trip settings. Sophisticated algorithms solve a series of differential equations that model true motor heating and cooling, resulting in superior motor overload protection while minimizing nuisance trips. Advanced selectable protective features safeguard the motor and system against a variety of system faults.
- Internal run bypass contactors and overload protection eliminate the need for additional devices, reducing enclosure sizes, minimizing installation and wiring time and reducing overall assembly size and cost.
- Wide range of overload FLA settings (31 – 100% of rated current) and a selectable trip class (5 – 30) offers users the flexibility to fine tune the starter to match specific application requirements.
- Variable ramp times and torque control settings provide unlimited starting configurations, allowing for maximum application flexibility.
- Kick-start feature enables soft starting of high friction loads.
- Soft stop control for applications where an abrupt stop of the load is not acceptable.
- Pump control option with sophisticated pump algorithms on both starting and stopping that minimize the pressure surges that cause water hammer. The pump control option will maximize the life of the pump and piping systems while minimizing the downtime caused by system failure.
- Six SCRs control all three motor phases, providing smooth acceleration and deceleration performance.
- Soft acceleration and deceleration reduces wear on belts, gears, chains, clutches, shafts and bearings.
- Reduce the peak inrush current's stress on the power system.
- Minimize peak starting torque to diminish mechanical system wear and damage.
- 24V DC control module enhances personnel and equipment safety.
- Removable, lockable control terminal block reduces maintenance costs. Also provides the opportunity for OEMs to reduce assembly and test costs by utilizing pre-assembled wire harnesses.

Protective Features

All protective features can be configured, enabled or disabled with the DIM or through the communications network.

Motor Overload

The S811 includes electronic overload protection as standard. The overload meets applicable requirements for a motor overload protective device. The overload protects the motor from over heat conditions with the use of sophisticated algorithms that model true motor heating, resulting in superior motor protection and fewer nuisance trips.

The S811 calculates a thermal memory value. A 100% value represents the maximum safe temperature of the motor. When the thermal memory value reaches 100%, an overload trip will occur removing power to the motor. Upon trip, the S811 stores the calculated motor heating value and will not allow a motor re-start until the motor has sufficiently cooled. This feature ensures the motor will not be damaged by repeated overload trip, reset and re-start cycles.

The thermal memory value can be monitored through the DIM or the communications network. The thermal memory value can be of great use in determining an impending overload trip condition. Alarms can be implemented in the process monitoring system warning of an impending trip before a trip occurs halting the process. Costly system downtime can be avoided.

The trip current is adjusted to match the specific application requirements by entering the motor nameplate full load current rating and trip class. The FLA adjustment includes a 3 to 1 adjustment range. The overload trip class is adjustable from class 5 through class 30. The overload is ambient temperature compensated — meaning its trip characteristics will not vary with changes in ambient temperature. The overload protection can be enabled, disabled, or disabled on start.

Short Circuit

The use of a short circuit protective device in coordination with the S811 is required in branch motor circuits by most electrical codes. Short circuit coordination ratings with both fuses and Cutler-Hammer molded case circuit breakers are available providing customers with design flexibility. The S811 has short circuit coordination ratings as an open component, an enclosed starter, and in a motor control center.

Jam

Excessive current and torque up to locked rotor levels can occur in a jam condition. The condition can result in stress and damage to the motor, load, mechanical system, and the electrical distribution system. Jam protection prevents the stress and damage from a jam during normal run. After the motor is started, a current greater than 300% FLA setting will cause the starter to trip on a jam fault.

Stall

Excessive current and torque up to locked rotor levels can occur in a stall condition. The condition can lead to an overload trip and result in stress and damage to the motor, load, mechanical system, and the electrical distribution system. Stall protection prevents stress and damage to a motor that has not come up to speed, or stalled after the soft start time. The S811 will trip to protect the system in the event that the motor did not get to the rated speed in the defined soft start period. A current greater than 200% FLA at the end of the soft start period will cause the starter to trip on a stall fault.

Pole Over Temperature

High ambient temperatures, extended ramp times and high duty cycle conditions may cause the S811 power pole conductors to reach a temperature that exceeds their thermal rating. The S811 is equipped with sensors that monitor the temperature of the power poles. Over temperature protection occurs if the device's thermal capacity is exceeded. The soft starter will trip in over temperature conditions, preventing device failure.

The device pole temperature value can be monitored through the DIM or the communications network. This feature can be of use in determining an impending over temperature trip condition. Alarms can be implemented in the process monitoring system warning of an impending trip before a trip occurs, halting the process. Costly system shutdown can be avoided.

Phase Loss

Loss of a phase can cause a significant increase in the current drawn in the remaining two phases. Phase loss can lead to motor damage before an eventual overload trip occurs. Phase loss is typically an indication of a failure in the electrical distribution system. The S811 will detect a phase loss and trip if any phase current drops below a preset value. The phase loss trip level is adjustable from 0% to 100% of the average of the other two phase levels with an adjustable trip delay of 0.1 to 60 seconds.

Phase Imbalance

Phase current or voltage imbalance can cause a significant increase in the current drawn in the remaining two phases. Phase imbalance can lead to motor damage before an eventual overload trip. Phase imbalance is typically an indication of a failure in the electrical distribution system or the motor. The S811 will detect both current and voltage phase imbalances and trip if any phase becomes imbalanced as compared to the average of the other two phases.

The phase current imbalance trip level is adjustable from 0% to 100% of the average of the current in the other two phases with an adjustable trip delay of 0.1 to 60 seconds.

The phase voltage imbalance trip level is adjustable from 0% to 100% of the average of the voltage in the other two phases with an adjustable trip delay of 0.1 to 60 seconds.

Reset Mode

The S811 can be set up for automatic or manual reset on trip. The manual reset mode requires the operator to physically press the RESET button located on the soft starter. The overload can be manually reset through the DIM or through the communications network. The overload can also be electrically reset by energizing a 24V DC input on the control terminal block.

The automatic reset mode allows the soft starter to be automatically reset as soon as the trip condition is no longer present. With the automatic reset mode, after the fault is no longer present, the motor will be restarted as soon as a valid start signal is present.

Phase Reversal

The S811 can determine if the proper line phase sequence is present by default. The device will trip if the line phase sequence is something other than A-B-C. The S811 can be configured to operate under reversed phase conditions (A-C-B).

Shorted SCR Detection

The S811 monitors the operation of the power poles and will trip under a shorted SCR condition.

Open SCR Detection

The S811 monitors the operation of the power poles and will trip under an open SCR condition.

Low Current

Low current conditions can be a result of a loss of load or a failure in the mechanical system. The S811 has low current protection that will trip if the average RMS current falls below a preset value. The low current protection can be programmed as a percent of motor FLA from 0% to 100%.

Low Voltage

Low voltage conditions can result from disturbances in the electrical power distribution system. Low voltage conditions can cause a malfunction and damage to electrical equipment. The S811 has low voltage protection that will trip if the average RMS voltage falls below a preset value. The low voltage protection can be programmed as a percent of nominal voltage from 1% to 99% with a trip delay of 0.1 to 60 seconds.

High Voltage

High voltage conditions can result from disturbances in the electrical power distribution system. High voltage conditions can cause malfunctions or failures of electrical equipment. The S811 has high voltage protection that will trip if the average RMS voltage is greater than a preset value. The high voltage protection can be programmed as a percent of nominal voltage from 101% to 120% with a trip delay of 0.1 to 60 seconds.

Monitoring Capabilities

The S811 has an impressive array of system monitoring capabilities that allow users to access real time process and diagnostic data. This data can be viewed at the device with the DIM or through a communications network. Data over a communications network can provide valuable insight into the condition of the equipment and processes. Maintenance and production personnel can monitor critical operational and maintenance data from a central control station that can be located far away from the production facility. Process data can be monitored to determine system anomalies that may indicate a need for preventive maintenance or an impeding failure. Adjustments made through the communications network can reduce costs by minimizing the time traveling to the location where the motor controls are located. When faults do occur, real time fault data can assist maintenance in troubleshooting and planning repair resources. Remote reset signals can be given to tripped devices without the need for manual intervention by maintenance personnel.

Average Line Current

Provides the average of the three-phase RMS line currents in amps, accurate to within 2%. Current data can be used to indicate a need for maintenance. Increased currents in a fixed load application can indicate a reduction in system efficiencies and performance, signifying system maintenance is due.

Average Pole Current

Provides the average of the three-phase RMS pole currents in amps, accurate to within 2%. The pole current is the current through the soft starter. The line and pole current will be identical in in-line applications, and will differ in inside-the-delta applications.

Average line current as a % FLA

Provides the average RMS line current as a percentage of the S811 FLA setting.

Three-Phase Line Currents

Provides three RMS phase line currents in amps, accurate to within 2%. Imbalances or changes in the relative phase current to one another can indicate anomalies in the motor or electrical distribution system.

Three-Phase Pole Currents

Provides three RMS phase pole currents in amps, accurate to within 2%. The pole current is the current through the soft starter. The line and pole current will be identical in in-line applications, and will differ in inside-the-delta applications.

Three-Phase Line Voltages

Provides the individual RMS three-phase line voltages. Imbalances or changes in the relative phase voltage to one another can indicate anomalies in the motor or electrical distribution system. Voltage can be used to monitor electrical distribution system performance. Warnings, alarms and system actions to low or high voltage conditions can be implemented.

Percent Thermal Memory

Provides the real time calculated thermal memory value. The S811 calculates thermal memory value. A 100% value represents the maximum safe temperature of the motor. When the thermal memory value reaches 100%, an overload trip will occur, removing power to the motor.

The thermal memory value can be of great use in determining an impending overload trip condition. Alarms can be implemented in the process monitoring system warning of an impending trip before a trip occurs, halting the process. Costly system downtime can be avoided.

DC Control Voltage

Monitors level of the 24V DC control voltage. Fluctuations in control voltage can cause component malfunction and failure. System control voltage data can be used to implement warnings, alarms and system actions to low or high voltage conditions.

Pole Temperature

Increases in pole temperature are caused by increases in ambient temperature, start/stop times and start duty cycles. Changes in pole temperatures represent a change in system operating conditions. Identifying unexpected operating conditions or changes can prompt maintenance and aid in process evaluation activities.

Device Temperature

An increase in device temperature is a strong indication of an increase in ambient temperature. High ambient temperature operation can be identified with the Device Temperature data. Ambient temperature increases can be due to loss of enclosure cooling fans or blocked venting. High ambient temperatures will reduce the life of all electrical equipment in the enclosure.

Start Count

Start count data can be used to monitor system output, schedule preventative maintenance, identify system anomalies and identify changes in system operation.

Diagnostics

Fault Queue

Current fault and a fault queue containing the last nine system faults can be read through the DIM or communications network. Fault identification can minimize troubleshooting time and cost and prevent arc flash incidents. The fault queue can be remotely accessed through a communications network to assist in planning maintenance resources. 30 different faults can be identified by the S811.

Control Status

The S811 provides data that represents system conditions that can be read through the DIM or the communications network. This data identifies the status of the system and the control commands the system is requesting of the S811. This can be used for advanced troubleshooting and system integration activities.

Breaker Status

The S811 has provisions to read and display circuit breaker status. Cutler-Hammer communicating Cover Control or other communicating protective device is required to take advantage of this feature.

Operation

Starting and Stopping Modes

The S811 has a variety of starting and stopping methods to provide superior performance in the most demanding applications. The motor can be started in either Voltage Ramp Start or Current Limit Start mode. Kick Start and Soft Stop are available within both starting modes.

Voltage Ramp Start

Provides a voltage ramp to the motor resulting in a constant torque increase. The most commonly used form of soft start, this start mode allows you to set the initial torque value and the duration of the ramp to full voltage conditions. Bypass contactors close after ramp time.

- Adjustable initial torque 0 – 85% of locked rotor torque.
- Adjustable ramp time 0.5 – 180 seconds (can be extended with factory modification).

Current Limit Start

Limits the maximum current available to the motor during the start phase. This mode of soft starting is used when it becomes necessary to limit the maximum starting current due to long start times or to protect the motor. This start mode allows you to set the maximum starting current as a percentage of locked rotor current and the duration of the current limit. Bypass contactors close after current limit time.

- Maximum current of 0 – 85% locked rotor current.
- Adjustable ramp time 0.5 – 180 seconds (can be extended with factory modification).

Kick Start

Selectable feature in both Voltage Ramp Start and Current Limit Start modes. Provides a current and torque "kick" for 0 to 2.0 seconds. This provides greater initial current to develop additional torque to breakaway a high friction load.

- 0 – 85% of locked rotor torque
- 0 – 2.0 seconds duration

Soft Stop

Allows for a controlled stopping of a load. Used when a stop-time that is greater than the coast-to-stop time is desired. Often used with high friction loads where a sudden stop may cause system or load damage.

- Stop time = 0 – 60 seconds.

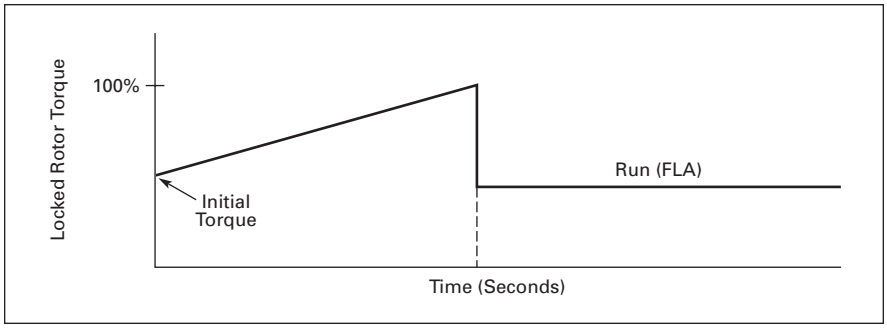

Figure 3. Starting Characteristics — Ramp Start

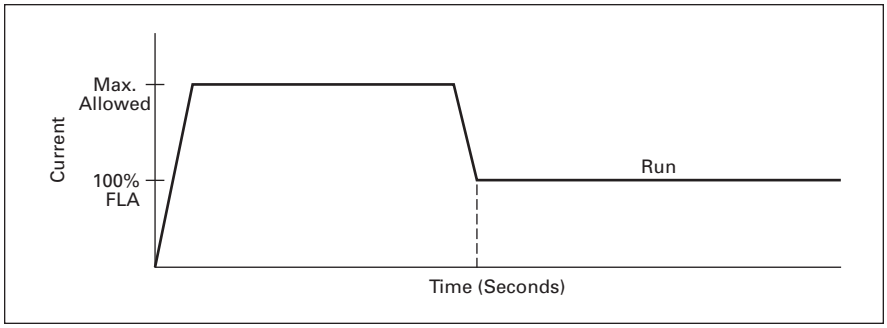

Figure 4. Starting Characteristics — Current Limit Start

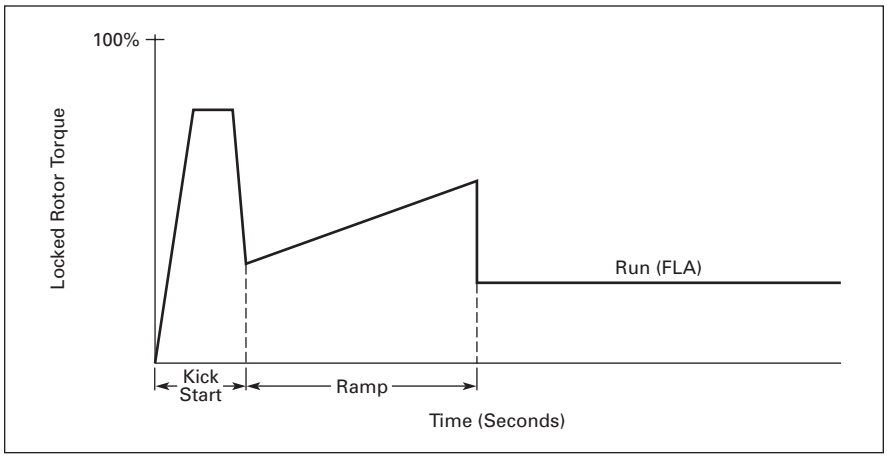

Figure 5. Starting Characteristics — Kick Start

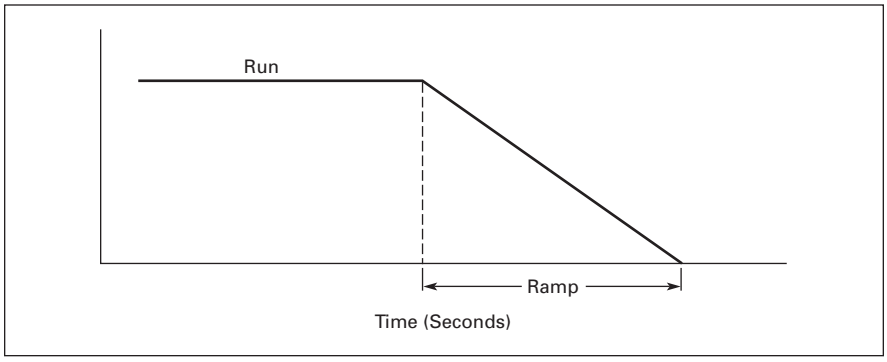

Figure 6. Starting Characteristics — Soft Stop

Catalog Number Selection

Table 2. S811 Open Soft Starters Catalog Numbering System

S 811 T 30 N 3 S

S = *IT.* Soft Starter

811 = Non-combination Soft Starter

Frame Size
- **N** = 65 mm
- **R** = 110 mm
- **T** = 200 mm
- **U** = 200 mm
- **V** = 290 mm

Ampacity Rating

37 = 37 amps	**36** = 360 amps
66 = 66 amps	**42** = 420 amps
10 = 105 amps	**50** = 500 amps ②
13 = 135 amps	**65** = 650 amps
18 = 180 amps	**72** = 720 amps
24 = 240 amps	**85** = 850 amps
30 = 304 amps	**10** = 1000 amps

N = No Options
P = Pump Control
V = 690V Option (Frame T18 through V85) ①

3 = 3-Pole Device

S = Standard Soft Starter (Configurable for Edge or Level Control)
D = Inside-the-Delta
L = Extended Ramp Start
W = Without DIM

① Not available in U-Frame.
② U-Frame 500 Amp unit does not have IEC Certification.

Edge and Level Sensing Control

Edge Sensing

Edge sensing is denoted with an "S" in the last character of the Catalog Number. *Example:* S801T30N3**S**.

Edge sensing requires +24V DC power be momentarily applied to pin 1 (with terminal P at +24V DC) to initiate a start under all conditions. After a stop or fault occurs, the +24V DC must be removed, then reapplied to pin 1 before another start can occur. This control configuration should be used when restarting of the motor after a fault or stop must be supervised manually or as a part of a control scheme. The cycling of +24V DC power to terminal 1 before starting is required regardless of the position of the auto reset switch on the CIM.

Level Sensing

Level sensing is denoted with a "B" in the last character of the Catalog Number. *Example:* S801T30N3**B**.

Level sensing will enable a motor to restart after a fault is cleared without cycling +24V DC power to terminal 1 as long as:

- Terminal P is supplied with +24V DC (to start from Terminal Block, Input #3 must also be enabled),
- The auto reset switch on the CIM is set to enabled,
- All faults have been reset.

This control configuration should be used where it is desirable to restart a motor after a fault without additional manual or automatic control. An example of this condition would be on a remote pumping station where it is desirable to automatically restart a pump after a power outage without operator intervention.

If the auto reset feature is used, CAUTION must be exercised to assure that any restart occurs in a safe manner.

Product Selection

Motor applications and customer needs come in many different varieties. With the standard and severe duty rating tables, we have attempted to provide guidelines on what the ***IT.*** Soft Starter is capable of. If the application falls under these categories, you can use these charts. For other applications, or when a question arises, consult with your local Eaton Representative or call our Technical Resource Center.

Standard Duty

Table 3. Standard Duty Ratings

Starting Method	Ramp Current % of FLA	Ramp Time Seconds	Starts per Hour	Ambient Temperature
vs. Soft Start	300%	30 sec.	3	50°C
vs. Full Voltage	500%	10 sec.	3	50°C
vs. Wye-Delta	350%	20 sec.	3	50°C
vs. 80% RVAT	480%	20 sec.	2	50°C
vs. 65% RVAT	390%	20 sec.	3	50°C
vs. 50% RVAT	300%	20 sec.	4	50°C

Table 4. Product Selection — 15 Second Ramp, 4 Starts per Hour, 300% Current Limit @ 40°C

Max. Current	Three-Phase Motors											Catalog Number	Price U.S. $
	kW Rating (50 Hz)			hp Rating (60 Hz)									
	230V	380 – 400V	440V	200V		230V		460V		575 – 690V			
				1.0SF	1.15SF	1.0SF	1.15SF	1.0SF	1.15SF	1.0SF	1.15SF		
Frame Size N													
37	10	18.5	18.5	10	10	10	10	25	20	30	30	**S811N37N3S**	1,960.
66	18.5	30	37	20	15	20	20	50	40	60	50	**S811N66N3S**	3,010.
Frame Size R													
105	30	55	59	30	25	40	30	75	60	100	75	**S811R10N3S**	4,540.
135	40	63	80	40	30	50	40	100	75	125	100	**S811R13N3S**	5,640.
Frame Size T													
180	51	90	110	60	50	60	60	150	125	150	150	**S811T18N3S**	5,780.
240	75	110	147	75	60	75	75	200	150	200	200	**S811T24N3S**	6,150.
304	90	160	185	100	75	100	100	250	200	300	250	**S811T30N3S**	6,540.
Frame Size U													
360	110	185	220	125	100	150	125	300	250	350	300	**S811U36N3S**	7,880.
420	129	220	257	150	125	175	150	350	300	450	350	**S811U42N3S**	8,870.
500	150	257	300	150	150	200	150	400	350	500	450	**S811U50N3S** ②	9,980.
Frame Size V													
360	110	185	220	125	100	150	125	300	250	350	300	**S811V36N3S**	7,610.
420	129	220	257	150	125	175	150	350	300	450	350	**S811V42N3S**	8,570.
500	150	257	300	150	150	200	150	400	350	500	450	**S811V50N3S**	9,640.
650	200	355	425	250	200	250	200	500	450	600	500	**S811V65N3S**	10,850.
720	220	400	450	—	—	300	250	600	500	700	600	**S811V72N3S**	12,470.
850	257	475	500	—	—	350	300	700	600	900	700	**S811V85N3S**	15,100.
1000	277	525	50	—	—	400	350	800	700	900	800	**S811V10N3S** ①	25,200.

① For more information on optimum performance of the 1000A Frame Size V S811, see Appendix E of MN03902002E.
② 500A rating does not have IEC certification.

Discount Symbol **1CD1**

Table 5. Product Selection — 25 Second Ramp, 4 Starts per Hour, 300% Current Limit @ 40°C

Max. Current	Three-Phase Motors											Catalog Number	Price U.S. $
	kW Rating (50 Hz)			hp Rating (60 Hz)									
	230V	380 – 400V	440V	200V		230V		460V		575 – 690V			
				1.0SF	1.15SF	1.0SF	1.15SF	1.0SF	1.15SF	1.0SF	1.15SF		
Frame Size N													
34	9	15	18.5	10	7-1/2	10	10	25	20	30	25	**S811N37N3S**	1,960.
63	15	30	33	20	15	20	20	40	40	60	50	**S811N66N3S**	3,010.
Frame Size R													
96	25	45	55	30	25	30	30	75	60	75	75	**S811R10N3S**	4,540.
120	33	63	63	40	30	40	40	75	75	100	100	**S811R13N3S**	5,640.
Frame Size T													
150	45	80	90	50	40	50	50	100	100	150	125	**S811T18N3S**	5,780.
215	63	110	132	60	60	75	60	150	150	200	150	**S811T24N3S**	6,150.
278	80	147	160	75	75	100	75	200	200	250	250	**S811T30N3S**	6,540.
Frame Size U													
320	90	160	185	100	75	125	100	250	200	300	250	**S811U36N3S**	7,880.
380	110	200	220	125	100	150	125	300	250	350	300	**S811U42N3S**	8,870.
460	140	250	280	150	125	150	150	350	300	450	400	**S811U50N3S** ②	9,980.
Frame Size V													
320	90	160	185	100	75	125	100	250	200	300	250	**S811V36N3S**	7,610.
380	110	200	220	125	100	150	125	300	250	350	300	**S811V42N3S**	8,570.
460	140	250	280	150	125	150	150	350	300	450	400	**S811V50N3S**	9,640.
610	185	315	375	250	150	200	200	500	450	600	500	**S811V65N3S**	10,850.
680	200	375	445	—	200	250	200	600	500	700	600	**S811V72N3S**	12,470.
810	250	450	500	—	—	300	300	700	600	900	700	**S811V85N3S**	15,100.
890	290	510	560	—	—	400	350	700	600	900	700	**S811V10N3S** ①	25,200.

① For more information on optimum performance of the 1000A Frame Size V S811, see Appendix E of MN03902002E.
② 500A rating does not have IEC certification.

Table 6. Product Selection — 15 Second Ramp, 4 Starts per Hour, 300% Current Limit @ 50°C

Max. Current	Three-Phase Motors											Catalog Number	Price U.S. $
	kW Rating (50 Hz)			hp Rating (60 Hz)									
	230V	380 – 400V	440V	200V		230V		460V		575 – 690V			
				1.0SF	1.15SF	1.0SF	1.15SF	1.0SF	1.15SF	1.0SF	1.15SF		
Frame Size N													
34	9	15	18.5	10	7-1/2	10	10	25	20	30	25	**S811N37N3S**	1,960.
63	15	30	33	20	15	20	20	40	40	60	50	**S811N66N3S**	3,010.
Frame Size R													
96	25	45	55	30	25	30	30	75	60	75	75	**S811R10N3S**	4,540.
120	33	63	63	40	30	40	40	75	75	100	100	**S811R13N3S**	5,640.
Frame Size T													
150	45	80	90	50	40	50	50	100	100	150	125	**S811T18N3S**	5,780.
215	63	110	132	60	60	75	60	150	150	200	150	**S811T24N3S**	6,150.
278	80	147	160	75	75	100	75	200	200	250	250	**S811T30N3S**	6,540.
Frame Size U													
320	90	160	185	100	75	125	100	250	200	300	250	**S811U36N3S**	7,880.
380	110	200	220	125	100	150	125	300	250	350	300	**S811U42N3S**	8,870.
460	140	250	280	150	125	150	150	350	300	450	400	**S811U50N3S** ④	9,980.
Frame Size V													
320	90	160	185	100	75	125	100	250	200	300	250	**S811V36N3S**	7,610.
380	110	200	220	125	100	150	125	300	250	350	300	**S811V42N3S**	8,570.
460	140	250	280	150	125	150	150	350	300	450	400	**S811V50N3S**	9,640.
610	185	315	375	250	150	200	200	500	450	600	500	**S811V65N3S**	10,850.
680	200	375	445	—	200	250	200	600	500	700	600	**S811V72N3S**	12,470.
830	257	450	500	—	—	300	300	700	600	900	700	**S811V85N3S**	15,100.
960	302	510	540	—	—	350	300	800	700	900	800	**S811V10N3S** ③	25,200.

③ For more information on optimum performance of the 1000A Frame Size V S811, see Appendix E of MN03902002E.
④ 500A rating does not have IEC certification.

Discount Symbol **1CD1**

Table 7. Product Selection — 50 Second Ramp, 2 Starts per Hour, 300% Current Limit @ 50°C

Max. Current	Three-Phase Motors											Catalog Number	Price U.S. $
	kW Rating (50 Hz)			hp Rating (60 Hz)									
	230V	380 – 400V	440V	200V		230V		460V		575 – 690V			
				1.0SF	1.15SF	1.0SF	1.15SF	1.0SF	1.15SF	1.0SF	1.15SF		
Frame Size N													
21	5.5	10	11	5	5	5	5	15	10	15	15	**S811N37N3S**	1,960.
42	11	18.5	22	10	10	15	10	30	25	40	30	**S811N66N3S**	3,010.
Frame Size R													
60	15	30	33	15	15	20	15	40	40	50	50	**S811R10N3S**	4,540.
80	22	40	45	25	20	30	25	60	50	75	60	**S811R13N3S**	5,640.
Frame Size T													
115	33	59	63	30	30	40	30	75	75	100	100	**S811T18N3S**	5,780.
150	45	80	90	50	40	50	50	100	100	150	125	**S811T24N3S**	6,150.
192	55	100	110	60	50	60	60	150	125	200	150	**S811T30N3S**	6,540.
Frame Size U													
280	80	150	160	75	75	100	75	200	200	250	250	**S811U36N3S**	7,880.
340	110	180	200	100	100	125	100	250	200	350	300	**S811U42N3S**	8,870.
380	110	200	220	125	100	150	125	300	250	350	300	**S811U50N3S** ②	9,980.
Frame Size V													
280	80	150	160	75	75	100	75	200	200	250	250	**S811V36N3S**	7,610.
340	110	180	200	100	100	125	100	250	200	350	300	**S811V42N3S**	8,570.
380	110	200	220	125	100	150	125	300	250	350	300	**S811V50N3S**	9,640.
420	129	220	257	150	125	150	150	350	300	450	350	**S811V65N3S**	10,850.
480	147	257	295	150	150	200	150	400	350	500	450	**S811V72N3S**	12,470.
590	180	315	375	200	150	200	200	500	400	600	500	**S811V85N3S**	15,100.
650	205	370	415	250	200	250	200	500	450	600	500	**S811V10N3S** ①	25,200.

① For more information on optimum performance of the 1000A Frame Size V S811, see Appendix E of MN03902002E.
② 500A rating does not have IEC certification.

Table 8. Product Selection — 15 Second Ramp, 4 Starts per Hour, 450% Current Limit @ 40°C

Max. Current	Three-Phase Motors											Catalog Number	Price U.S. $
	kW Rating (50 Hz)			hp Rating (60 Hz)									
	230V	380 – 400V	440V	200V		230V		460V		575 – 690V			
				1.0SF	1.15SF	1.0SF	1.15SF	1.0SF	1.15SF	1.0SF	1.15SF		
Frame Size N													
29	7.5	12.5	15	7-1/2	7-1/2	10	7-1/2	20	15	25	20	**S811N37N3S**	1,960.
49	12.5	22	25	15	10	15	15	30	30	40	40	**S811N66N3S**	3,010.
Frame Size R													
73	18.5	37	40	20	20	25	20	50	40	60	60	**S811R10N3S**	4,540.
94	25	45	55	30	25	30	30	60	60	75	75	**S811R13N3S**	5,640.
Frame Size T													
155	45	80	90	50	40	60	50	100	100	150	125	**S811T18N3S**	5,780.
219	63	110	132	60	60	75	60	150	150	200	150	**S811T24N3S**	6,150.
280	80	150	160	75	75	100	75	200	200	250	250	**S811T30N3S**	6,540.
Frame Size U													
345	100	185	200	100	100	125	100	250	200	350	300	**S811U36N3S**	7,880.
405	110	200	250	125	100	150	125	300	250	400	350	**S811U42N3S**	8,870.
Frame Size V													
345	100	185	200	100	100	125	100	250	200	350	300	**S811V36N3S**	7,610.
405	110	200	250	125	100	150	125	300	250	400	350	**S811V42N3S**	8,570.
465	140	250	280	150	125	150	150	350	300	450	400	**S811V50N3S**	9,640.
530	160	280	335	150	150	200	150	450	350	500	450	**S811V65N3S**	10,850.
590	180	315	375	200	150	—	200	500	400	600	500	**S811V72N3S**	12,470.
651	200	355	425	—	—	—	—	600	450	700	600	**S811V85N3S**	15,100.
754	220	400	465	—	—	—	—	600	500	800	700	**S811V10N3S** ③	25,200.

③ For more information on optimum performance of the 1000A Frame Size V S811, see Appendix E of MN03902002E.

Discount Symbol **1CD1**

Table 9. Product Selection — 30 Second Ramp, 4 Starts per Hour, 450% Current Limit @ 40°C

Max. Current	Three-Phase Motors											Catalog Number	Price U.S. $
	kW Rating (50 Hz)			hp Rating (60 Hz)									
	230V	380 – 400V	440V	200V		230V		460V		575 – 690V			
				1.0SF	1.15SF	1.0SF	1.15SF	1.0SF	1.15SF	1.0SF	1.15SF		
Frame Size N													
21	5.5	10	12.5	5	5	5	5	15	10	15	15	**S811N37N3S**	1,960.
40	11	18.5	22	10	10	10	10	30	25	30	30	**S811N66N3S**	3,010.
Frame Size R													
55	15	25	30	15	15	20	15	40	30	50	40	**S811R10N3S**	4,540.
75	22	37	45	20	20	25	20	50	50	60	60	**S811R13N3S**	5,640.
Frame Size T													
151	45	80	90	50	40	50	50	100	100	150	125	**S811T18N3S**	5,780.
215	63	110	132	60	60	75	60	150	150	200	150	**S811T24N3S**	6,150.
264	80	140	160	75	75	100	75	200	150	250	200	**S811T30N3S**	6,540.
Frame Size U													
300	90	160	185	100	75	100	100	200	200	300	250	**S811U36N3S**	7,880.
340	100	180	200	100	100	125	100	250	200	350	300	**S811U42N3S**	8,870.
Frame Size V													
300	90	160	185	100	75	100	100	200	200	300	250	**S811V36N3S**	7,610.
340	100	180	200	100	100	125	100	250	200	350	300	**S811V42N3S**	8,570.
380	110	200	220	125	100	150	125	300	250	350	300	**S811V50N3S**	9,640.
420	129	220	257	150	125	150	150	350	300	450	350	**S811V65N3S**	10,850.
460	140	250	280	150	125	150	150	350	300	450	400	**S811V72N3S**	12,470.
500	150	257	300	150	150	200	150	400	350	500	450	**S811V85N3S**	15,100.
560	160	277	325	200	150	250	200	500	400	600	500	**S811V10N3S** ①	25,200.

① For more information on optimum performance of the 1000A Frame Size V S811, see Appendix E of MN03902002E.

Discount Symbol **1CD1**

Severe Duty

Table 10. Severe Duty Ratings

Starting Method	Ramp Current % of FLA	Ramp Time Seconds	Starts per Hour	Ambient Temperature
vs. Soft Start	450%	30 sec.	4	50°C
vs. Full Voltage	500%	10 sec.	10	50°C
vs. Wye-Delta	350%	65 sec.	3	50°C
vs. 80% RVAT	480%	25 sec.	4	50°C
vs. 65% RVAT	390%	40 sec.	4	50°C
vs. 50% RVAT	300%	60 sec.	4	50°C

Table 11. Product Selection — > 30 Second Ramp, > 4 Starts per Hour or >300% Current Limit

Max. Current	Three-Phase Motors											Catalog Number	Price U.S. $
	kW Rating (50 Hz)			hp Rating (60 Hz)									
	230V	380 – 400V	440V	200V		230V		460V		575 – 690V			
				1.0SF	1.15SF	1.0SF	1.15SF	1.0SF	1.15SF	1.0SF	1.15SF		
Frame Size N													
22	5.5	10	11	5	5	7-1/2	5	15	10	20	15	**S811N37N3S**	1,960.
42	11	18.5	22	10	10	15	10	30	25	40	30	**S811N66N3S**	3,010.
Frame Size R													
65	15	30	33	15	15	20	15	50	40	50	50	**S811R10N3S**	4,540.
80	22	40	45	25	20	30	25	60	50	75	60	**S811R13N3S**	5,640.
Frame Size T													
115	33	59	63	30	30	40	30	75	75	100	100	**S811T18N3S**	5,780.
150	45	80	90	50	40	50	50	100	100	150	125	**S811T24N3S**	6,150.
192	55	100	110	60	50	75	60	150	125	200	150	**S811T30N3S**	6,540.
Frame Size U													
240	75	110	147	75	60	75	75	200	150	200	200	**S811U36N3S**	7,880.
305	90	160	185	100	75	100	100	250	200	300	250	**S811U42N3S**	8,870.
Frame Size V													
240	75	110	147	75	60	75	75	200	150	200	200	**S811V36N3S**	7,610.
305	90	160	185	100	75	100	100	250	200	300	250	**S811V42N3S**	8,570.
365	110	185	220	125	100	150	125	300	250	350	300	**S811V50N3S**	9,640.
420	129	220	257	150	125	150	150	350	300	450	350	**S811V65N3S**	10,850.
480	147	257	295	150	150	200	150	400	350	500	450	**S811V72N3S**	12,470.
525	160	280	335	150	150	200	150	450	350	500	450	**S811V85N3S**	15,100.
575	172	303	370	200	150	250	200	500	450	600	500	**S811V10N3S** ①	25,200.

① For more information on optimum performance of the 1000A Frame Size V S811, see Appendix E of MN03902002E.

Severe Duty Ratings are defined as any combination of parameters that exceed the Standard Duty Ratings where the ramp time is over 30 seconds, the number of starts per hour exceeds 4, or the current limit set is over 300%. *Example:* 35-Second Ramp, 5 Starts per Hour, 350% Current Limit @ 40°C Ambient.

Discount Symbol **1CD1**

Inside-the-Delta Standard Duty Ratings

Table 12. 15 Second Ramp, 4 Starts per Hour, 300% Current Limit @ 40°C Ambient

Max. Continuous Motor Line Current	Three-Phase Motor											Catalog Number	Price U.S. $
	kW Rating (50 Hertz)			hp Rating (60 Hertz)									
	230	380 – 400	440	200V		230V		460V		575V			
	Volt	Volt	Volt	1.0SF	1.15SF	1.0SF	1.15SF	1.0SF	1.15SF	1.0SF	1.15SF		
Frame Size N													
65	10	18.5	18.5	15	15	15	15	40	30	50	50	**S811N37N3D**	1,960.
114	18.5	30	37	30	25	30	30	75	60	100	75	**S811N66N3D**	3,010.
Frame Size R													
182	30	55	59	50	40	60	50	125	100	150	125	**S811R10N3D**	4,540.
234	40	63	80	60	50	75	60	150	125	200	150	**S811R13N3D**	5,640.
Frame Size T													
311	51	90	110	100	75	100	100	250	200	250	250	**S811T18N3D**	5,780.
415	75	110	147	125	100	125	125	300	250	300	300	**S811T24N3D**	6,150.
526	90	160	185	150	125	150	150	400	300	400	400	**S811T30N3D**	6,540.
Frame Size U													
623	110	185	220	200	150	250	200	450	400	550	450	**S811U36N3D**	7,880.
727	129	220	257	250	200	300	250	550	450	700	550	**S811U42N3D**	8,870.
865	150	257	300	250	250	300	250	600	550	750	700	**S811U50N3D** ①②	9,980.
Frame Size V													
623	110	185	220	200	150	250	200	450	400	550	450	**S811V36N3D**	7,610.
727	129	220	257	250	200	300	250	550	450	700	550	**S811V42N3D**	8,570.
865	150	257	300	250	250	300	250	600	550	750	700	**S811V50N3D**	9,640.
1125	200	355	425	400	300	400	300	750	700	900	750	**S811V65N3D**	10,850.
1246	—	—	—	—	—	—	—	—	—	—	—	**S811V72N3D**	12,470.
1471	—	—	—	—	—	—	—	—	—	—	—	**S811V85N3D**	15,100.
—	—	—	—	—	—	—	—	—	—	—	—	**S811V10N3D** ③	25,200.

① 15 sec. start, 300% inrush, 40°C, 1 start every 15 minutes. If these start parameters are exceeded, please refer to 290 mm V-Frame, 865A Inside-the-Delta Starter.
② U-Frame 500 Amp unit does not have IEC Certification.
③ For more information on optimum performance of the 1000A Frame Size V S811, see Appendix E of MN03902002E.

Table 13. 25 Second Ramp, 4 Starts per Hour, 300% Current Limit @ 40°C Ambient

Max. Continuous Motor Line Current	Three-Phase Motor											Catalog Number	Price U.S. $
	kW Rating (50 Hertz)			hp Rating (60 Hertz)									
	230	380 – 400	440	200V		230V		460V		575V			
	Volt	Volt	Volt	1.0SF	1.15SF	1.0SF	1.15SF	1.0SF	1.15SF	1.0SF	1.15SF		
Frame Size N													
58	9	15	18.5	15	10	15	15	40	30	50	40	**S811N37N3D**	1,960.
108	15	30	33	30	25	30	30	60	60	100	75	**S811N66N3D**	3,010.
Frame Size R													
164	25	45	55	50	40	50	50	125	100	125	125	**S811R10N3D**	4,540.
206	33	63	63	60	50	60	50	125	125	150	150	**S811R13N3D**	5,640.
Frame Size T													
257	45	80	90	75	60	75	60	150	150	250	200	**S811T18N3D**	5,780.
365	63	110	132	100	100	125	100	250	250	300	250	**S811T24N3D**	6,150.
477	80	147	160	125	125	150	125	300	300	400	400	**S811T30N3D**	6,540.
Frame Size U													
554	90	160	185	150	125	200	150	400	300	450	400	**S811U36N3D**	7,880.
646	110	200	220	200	150	250	200	500	400	550	450	**S811U42N3D**	8,870.
796	140	250	280	250	200	250	250	550	500	700	600	**S811U50N3D** ④⑤	9,980.
Frame Size V													
554	90	160	185	150	125	200	150	400	300	450	400	**S811V36N3D**	7,610.
646	110	200	220	200	150	250	200	500	400	550	450	**S811V42N3D**	8,570.
796	140	250	280	250	200	250	250	550	500	700	600	**S811V50N3D**	9,640.
1055	185	315	375	400	250	300	300	800	700	900	750	**S811V65N3D**	10,850.
1176	200	375	445	—	300	400	300	900	800	900	900	**S811V72N3D**	12,470.
1358	—	—	—	—	—	—	—	—	—	—	—	**S811V85N3D**	15,100.
—	—	—	—	—	—	—	—	—	—	—	—	**S811V10N3D** ⑥	25,200.

④ 15 sec. start, 300% inrush, 40°C, 1 start every 15 minutes. If these start parameters are exceeded, please refer to 290 mm V-Frame, 796A Inside-the-Delta Starter.
⑤ U-Frame 500 Amp unit does not have IEC Certification.
⑥ For more information on optimum performance of the 1000A Frame Size V S811, see Appendix E of MN03902002E.

Discount Symbol **1CD1**

Inside-the-Delta Standard Duty Ratings

Table 14. 15 Second Ramp, 4 Starts per Hour, 300% Current Limit @ 50°C Ambient

Max. Continuous Motor Line Current	Three-Phase Motor											Catalog Number	Price U.S. $
	kW Rating (50 Hertz)			hp Rating (60 Hertz)									
	230	380 – 400	440	200V		230V		460V		575V			
	Volt	Volt	Volt	1.0SF	1.15SF	1.0SF	1.15SF	1.0SF	1.15SF	1.0SF	1.15SF		
Frame Size N													
58	9	15	18.5	15	10	15	15	40	30	50	40	**S811N37N3D**	1,960.
108	15	30	33	30	25	30	30	60	60	100	75	**S811N66N3D**	3,010.
Frame Size R													
164	25	45	55	50	40	50	50	125	100	125	125	**S811R10N3D**	4,540.
206	33	63	63	60	50	60	60	125	125	150	150	**S811R13N3D**	5,640.
Frame Size T													
257	45	80	90	75	60	75	75	150	150	250	200	**S811T18N3D**	5,780.
365	63	110	132	100	100	125	100	250	250	300	250	**S811T24N3D**	6,150.
477	80	147	160	125	125	150	125	300	300	400	400	**S811T30N3D**	6,540.
Frame Size U													
554	90	160	185	150	125	200	150	400	300	450	400	**S811U36N3D**	7,880.
646	110	200	220	200	150	250	200	450	400	550	450	**S811U42N3D**	8,870.
796	140	250	280	250	200	250	250	550	450	700	600	**S811U50N3D** ①	9,980.
Frame Size V													
554	90	160	185	150	125	200	150	400	300	450	400	**S811V36N3D**	7,610.
646	110	200	220	200	150	250	200	450	400	550	450	**S811V42N3D**	8,570.
796	140	250	280	250	200	250	250	550	450	700	600	**S811V50N3D**	9,640.
1055	185	315	375	400	250	300	300	750	700	900	750	**S811V65N3D**	10,850.
1176	200	375	445	—	—	—	—	—	—	—	—	**S811V72N3D**	12,470.
1358	257	450	500	—	—	—	—	—	—	—	—	**S811V85N3D**	15,100.
—	—	—	—	—	—	—	—	—	—	—	—	**S811V10N3D** ②	25,200.

① U-Frame 500 Amp unit does not have IEC Certification.
② For more information on optimum performance of the 1000A Frame Size V S811, see Appendix E of MN03902002E.

Table 15. 50 Second Ramp, 2 Starts per Hour, 300% Current Limit @ 50°C Ambient

Max. Continuous Motor Line Current	Three-Phase Motor											Catalog Number	Price U.S. $
	kW Rating (50 Hertz)			hp Rating (60 Hertz)									
	230	380 – 400	440	200V		230V		460V		575V			
	Volt	Volt	Volt	1.0SF	1.15SF	1.0SF	1.15SF	1.0SF	1.15SF	1.0SF	1.15SF		
Frame Size N													
36	5.5	10	11	7-1/2	7-1/2	7-1/2	7-1/2	25	15	25	25	**S811N37N3D**	1,960.
73	11	18.5	22	15	15	25	15	50	40	60	50	**S811N66N3D**	3,010.
Frame Size R													
103	15	30	33	25	25	30	25	60	60	75	75	**S811R10N3D**	4,540.
138	22	40	45	40	30	50	40	100	75	125	100	**S811R13N3D**	5,640.
Frame Size T													
199	33	59	63	50	50	60	50	125	125	150	150	**S811T18N3D**	5,780.
257	45	80	90	75	60	75	75	150	150	250	200	**S811T24N3D**	6,150.
324	55	100	110	100	75	100	100	250	200	300	250	**S811T30N3D**	6,540.
Frame Size U													
485	80	150	160	125	125	150	125	300	300	400	400	**S811U36N3D**	7,880.
580	100	180	200	150	150	200	150	400	300	550	450	**S811U42N3D**	8,870.
646	110	200	220	200	150	250	200	450	400	550	450	**S811U50N3D** ③	9,980.
Frame Size V													
485	80	150	160	125	125	150	125	300	300	400	400	**S811V36N3D**	7,610.
580	100	180	200	150	150	200	150	400	300	550	450	**S811V42N3D**	8,570.
646	110	200	220	200	150	250	200	450	400	550	450	**S811V50N3D**	9,640.
727	129	220	257	250	200	250	250	550	500	700	550	**S811V65N3D**	10,850.
816	147	257	295	250	250	300	250	600	550	750	700	**S811V72N3D**	12,470.
1021	180	315	375	300	250	300	300	750	600	900	750	**S811V85N3D**	15,100.
—	—	—	—	—	—	—	—	—	—	—	—	**S811V10N3D** ④	25,200.

③ U-Frame 500 Amp unit does not have IEC Certification.
④ For more information on optimum performance of the 1000A Frame Size V S811, see Appendix E of MN03902002E.

Discount Symbol **1CD1**

Inside-the-Delta Standard Duty Ratings

Table 16. 15 Second Ramp, 4 Starts per Hour, 450% Current Limit @ 40°C Ambient

Max. Continuous Motor Line Current	Three-Phase Motor											Catalog Number	Price U.S. $
	kW Rating (50 Hertz)			hp Rating (60 Hertz)									
	230	380 – 400	440	200V		230V		460V		575V			
	Volt	Volt	Volt	1.0SF	1.15SF	1.0SF	1.15SF	1.0SF	1.15SF	1.0SF	1.15SF		
Frame Size N													
47	7.5	12.5	15	10	10	15	10	30	25	40	30	**S811N37N3D**	1,960.
83	12.5	22	25	25	15	25	25	50	50	60	60	**S811N66N3D**	3,010.
Frame Size R													
126	18.5	37	40	30	30	40	30	75	60	100	100	**S811R10N3D**	4,540.
162	25	45	55	50	40	50	50	100	100	125	125	**S811R13N3D**	5,640.
Frame Size T													
266	45	80	90	75	60	100	75	150	150	250	200	**S811T18N3D**	5,780.
379	63	110	132	100	100	125	100	250	250	300	250	**S811T24N3D**	6,150.
485	80	150	160	125	125	150	125	300	300	400	400	**S811T30N3D**	6,540.
Frame Size U													
580	100	185	200	150	150	200	150	400	300	550	450	**S811U36N3D**	7,880.
695	110	200	250	200	150	250	200	450	400	600	550	**S811U42N3D**	8,870.
798	140	250	280	250	200	250	250	550	450	700	600	**S811U50N3D** ①	9,980.
Frame Size V													
580	100	185	200	150	150	200	150	400	300	550	450	**S811V36N3D**	7,610.
695	110	200	250	200	150	250	200	450	400	600	550	**S811V42N3D**	8,570.
798	140	250	280	250	200	250	250	550	450	700	600	**S811V50N3D**	9,640.
908	160	280	335	250	250	300	250	700	550	750	700	**S811V65N3D**	10,850.
1021	—	—	—	—	—	—	—	—	—	—	—	**S811V72N3D**	12,470.
1125	—	—	—	—	—	—	—	—	—	—	—	**S811V85N3D**	15,100.

① U-Frame 500 Amp unit does not have IEC Certification.

Table 17. 30 Second Ramp, 4 Starts per Hour, 450% Current Limit @ 40°C Ambient

Max. Continuous Motor Line Current	Three-Phase Motor											Catalog Number	Price U.S. $
	kW Rating (50 Hertz)			hp Rating (60 Hertz)									
	230	380 – 400	440	200V		230V		460V		575V			
	Volt	Volt	Volt	1.0SF	1.15SF	1.0SF	1.15SF	1.0SF	1.15SF	1.0SF	1.15SF		
Frame Size N													
36	5.5	10	12.5	7-1/2	7-1/2	7-1/2	7-1/2	25	15	25	25	**S811N37N3D**	1,960.
69	11	18.5	22	15	15	15	15	50	40	50	50	**S811N66N3D**	3,010.
Frame Size R													
96	15	25	30	25	25	30	25	60	50	75	60	**S811R10N3D**	4,540.
130	22	37	45	30	30	40	30	75	75	100	100	**S811R13N3D**	5,640.
Frame Size T													
257	45	80	90	75	60	75	75	150	150	250	200	**S811T18N3D**	5,780.
365	63	110	132	100	100	125	100	250	250	300	250	**S811T24N3D**	6,150.
448	80	140	160	125	125	150	125	300	250	400	300	**S811T30N3D**	6,540.
Frame Size U													
503	90	160	185	150	125	150	150	300	300	450	400	**S811U36N3D**	7,880.
580	100	180	200	150	150	200	150	400	300	550	450	**S811U42N3D**	8,870.
646	110	200	220	200	150	250	200	450	400	550	450	**S811U50N3D** ②	9,980.
Frame Size V													
503	90	160	185	150	125	150	150	300	300	450	400	**S811V36N3D**	7,610.
580	100	180	200	150	150	200	150	400	300	550	450	**S811V42N3D**	8,570.
646	110	200	220	200	150	250	200	450	400	550	450	**S811V50N3D**	9,640.
727	129	220	257	250	200	250	250	550	450	700	550	**S811V65N3D**	10,850.
796	—	—	—	—	—	—	—	—	—	—	—	**S811V72N3D**	12,470.
865	—	—	—	—	—	—	—	—	—	—	—	**S811V85N3D**	15,100.

② U-Frame 500 Amp unit does not have IEC Certification.

Discount Symbol **1CD1**

Inside-the-Delta Severe Duty Ratings

Severe Duty Ratings are defined as any combination of parameters that exceed the Standard Duty Ratings where the ramp time is over 30 seconds, the number of starts per hour exceeds 4, or the current limit set is over 300%.

Example: 35-Second Ramp, 5 Starts per Hour 350% Current Limit @ 40°C Ambient.

Table 18. Severe Duty Inside-the-Delta Ratings

Max. Continuous Motor Line Current	Three-Phase Motor											Catalog Number	Price U.S. $
	kW Rating (50 Hertz)			hp Rating (60 Hertz)									
	230	380 – 400	440	200V		230V		460V		575V			
	Volt	Volt	Volt	1.0SF	1.15SF	1.0SF	1.15SF	1.0SF	1.15SF	1.0SF	1.15SF		
Frame Size N													
39	5.5	10	11	7-1/2	7-1/2	10	7-1/2	25	15	30	25	**S811N37N3D**	1,960.
73	11	18.5	22	15	15	25	15	50	40	60	50	**S811N66N3D**	3,010.
Frame Size R													
111	15	30	33	25	25	30	25	75	60	75	75	**S811R10N3D**	4,540.
138	22	40	45	40	30	50	40	100	75	120	100	**S811R13N3D**	5,640.
Frame Size T													
199	33	59	63	50	50	60	50	125	125	150	150	**S811T18N3D**	5,780.
257	45	80	90	75	60	75	75	150	150	250	200	**S811T24N3D**	6,150.
324	55	100	110	100	75	100	100	250	200	300	250	**S811T30N3D**	6,540.
Frame Size U													
415	75	110	147	125	100	125	125	300	250	300	300	**S811U36N3D**	7,880.
526	90	160	185	150	120	150	150	400	300	450	400	**S811U42N3D**	8,870.
623	110	185	220	200	150	250	200	450	400	550	450	**S811U50N3D** ①	9,980.
Frame Size V													
415	75	110	147	125	100	125	125	300	250	300	300	**S811V36N3D**	7,610.
526	90	160	185	150	120	150	150	400	300	450	400	**S811V42N3D**	8,570.
623	110	185	220	200	150	250	200	450	400	550	450	**S811V50N3D**	9,640.
727	129	220	257	250	200	250	250	550	450	700	550	**S811V65N3D**	10,850.
816	147	257	295	250	250	300	250	600	550	750	700	**S811V72N3D**	12,470.
908	160	280	335	250	250	300	250	700	550	750	700	**S811V85N3D**	15,100.
—	—	—	—	—	—	—	—	—	—	—	—	**S811V10N3D** ②	25,200.

① U-Frame 500 Amp unit does not have IEC Certification.
② For more information on optimum performance of the 1000A Frame Size V S811, see Appendix E of MN03902002E.

Typical Power Wiring Diagrams

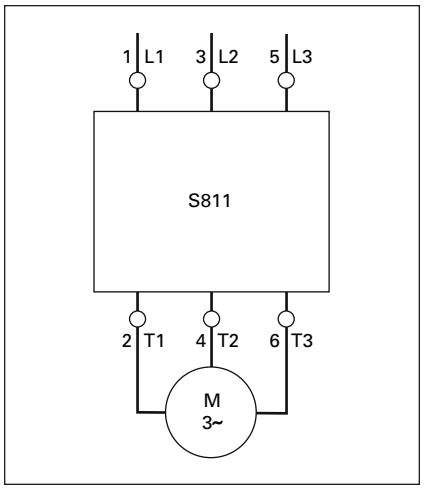

Figure 7. Line Connected Soft Starter Power Wiring Diagram

Discount Symbol **1CD1**

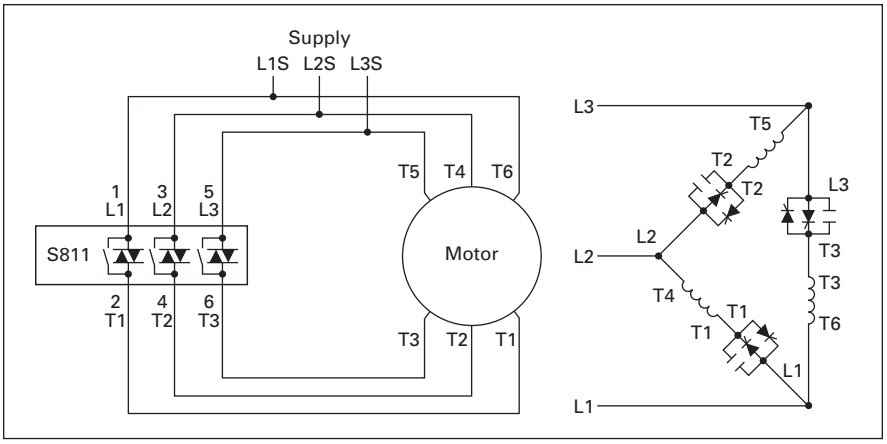

Figure 8. Inside-the-Delta Connected Soft Starter Power Wiring Diagram for a 6-Lead Motor

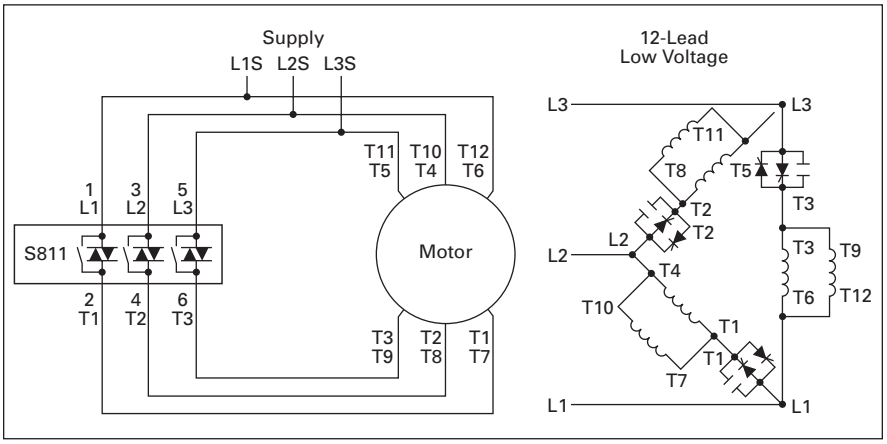

Figure 9. Inside-the-Delta Connected Soft Starter Power Wiring Diagram for a 12-Lead Low Voltage Motor

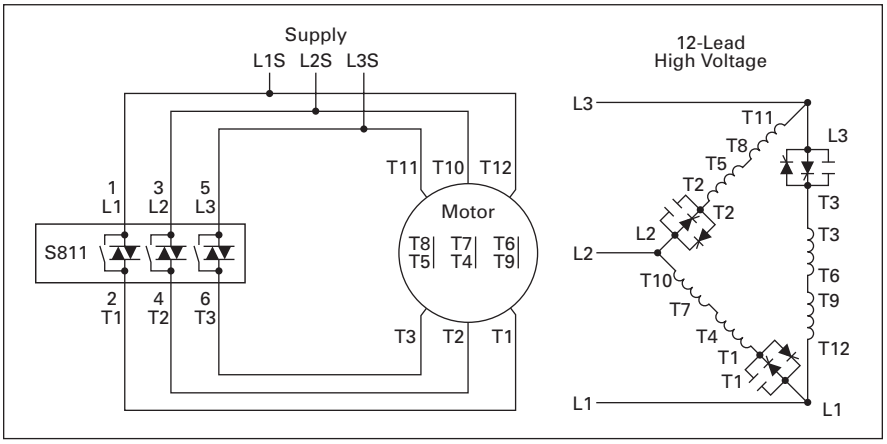

Figure 10. Inside-the-Delta Connected Soft Starter Power Wiring Diagram for a 12-Lead High Voltage Motor

Options

Extended Ramp

For a longer ramp acceleration time of .5 – 360 seconds, change the last digit in the Catalog Number from **Page 9** to **L**.

Table 19. Extended Ramp Option

Frame Size	Max. Current	Catalog Number	Price U.S. $
N	37	**S811N37N3L**	2,360.
	66	**S811N66N3L**	3,415.
R	105	**S811R10N3L**	4,945.
	135	**S811R13N3L**	5,640.
T	180	**S811T18N3L**	6,190.
	240	**S811T24N3L**	6,570.
	304	**S811T30N3L**	6,940.
U	360	**S811U36N3L**	8,320.
	420	**S811U42N3L**	9,290.
	500	**S811U50N3L** ①	10,400.
V	360	**S811V36N3L**	8,030.
	420	**S811V42N3L**	8,970.
	500	**S811V50N3L**	10,040.
	650	**S811V65N3L**	11,260.
	720	**S811V72N3L**	12,870.
	850	**S811V85N3L**	15,490.
	1000	**S811V10N3L**	24,710.

① U-Frame 500 Amp unit does not have IEC Certification.

Extended Ramp and 690V Option

690V ratings are available on the T and V Frames by changing the **8th** digit in the Catalog Number to **V**.

Table 20. 690V Option

Frame Size	Max. Current	Catalog Number	Price U.S. $
T	180	**S811T18V3L**	6,930.
	240	**S811T24V3L**	7,310.
	304	**S811T30V3L**	7,450.
V	360	**S811V36V3L**	8,530.
	420	**S811V42V3L**	9,490.
	500	**S811V50V3L**	10,560.
	650	**S811V65V3L**	11,770.
	720	**S811V72V3L**	13,380.
	850	**S811V85V3L**	16,010.

Pump Control

For pump control option, change the **8th** digit in the Catalog Number to **P**.

Table 21. Pump Control Option

Frame Size	Max. Current	Catalog Number	Price U.S. $
N	37	**S811N37P3S**	3,170.
	66	**S811N66P3S**	4,230.
R	105	**S811R10P3S**	5,750.
	135	**S811R13P3S**	6,660.
T	180	**S811T18P3S**	7,010.
	240	**S811T24P3S**	7,360.
	304	**S811T30P3S**	7,740.
U	360	**S811U36P3S**	9,160.
	420	**S811U42P3S**	10,150.
	500	**S811U50P3S** ②	11,250.
V	360	**S811V36P3S**	8,850.
	420	**S811V42P3S**	9,800.
	500	**S811V50P3S**	10,860.
	650	**S811V65P3S**	12,090.
	720	**S811V72P3S**	13,690.
	850	**S811V85P3S**	16,330.
	1000	**S811V10P3S**	25,490.

② U-Frame 500 Amp unit does not have IEC Certification.

Accessories

Surge Suppressors

The surge suppressor can mount on either the line or load side of the ***IT.*** Soft Starter. It is designed to clip the line voltage (or load side induced voltage).

Table 22. Surge Suppressors

Description	Catalog Number	Price U.S. $
600V MOV for 65 mm and 110 mm units	**EMS38**	178.
600V MOV for 200 mm and 290 mm units	**EMS39**	193.
690V MOV for 200 mm ③ and 290 mm units	**EMS41**	220.

③ T-Frame only.

Surge Suppressor

Surge Suppressor Mounted on a 200 mm Device

Lug Kits

The 200 mm and 290 mm soft starters do not include lugs.

The 200 mm and 290 mm soft starters each have different lug options based on your wiring needs. Each lug kit contains three lugs which can be mounted on either the load or line side.

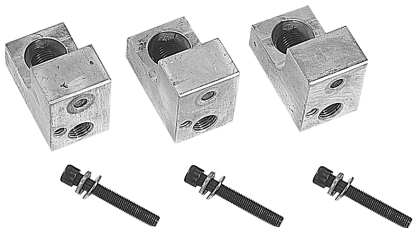

Lug Kits — EML23

Table 23. Lug Kits

Frame Size	Frame Designation	Description	Catalog Number	Price U.S. $
200 mm SSRV	T, U	2 cable connections, 4 AWG to 1/0 cable	**EML22**	175.
		1 cable connection, 4/0 to 500 MCM cable	**EML23**	197.
		2 cable connections, 4/0 to 500 MCM cable	**EML24**	249.
		1 cable connection, 2/0 to 300 MCM cable	**EML25**	175.
		2 cable connections, 2/0 to 300 MCM cable	**EML26**	222.
290 mm SSRV	V	2 cable connections, 4/0 to 500 MCM cable	**EML28**	402.
		4 cable connections, 4/0 to 500 MCM cable	**EML30**	403.
		6 cable connections, 4/0 to 500 MCM cable	**EML32**	585.
		4 cable connections, 2/0 to 300 MCM cable	**EML33** ④	408.

④ The EML33 does not have a CSA Listing.

Lug Cover Kits

Replacement covers for the T and V frame are available in case of damage to the existing covers.

Table 24. Lug Cover Kits

Description	Catalog Number	Price U.S.$
Lug Cover T, U Frame	**EML27**	79.
Lug Cover V Frame	**EML34**	98.

Discount Symbol **1CD1**

Digital Interface Module

The Digital Interface Module (DIM) is available as a replacement part.

Table 25. DIM

Description	Catalog Number	Price U.S. $
Blank Cover (Filler)	**EMA68**	58.50
DIM	**EMA91**	332.00
Panel Mounting Kit —		
3 ft. Cable	**EMA69A**	196.00
5 ft. Cable	**EMA69B**	221.00
8 ft. Cable	**EMA69C**	245.00
10 ft. Cable	**EMA69D**	271.00

Control Wire Connector

Table 26. Control Wire Connector

Description	Catalog Number	Price U.S.$
12 pin, 5 mm pitch Connector for Control Wiring	**EMA75L**	16.20

User Manual

A comprehensive user manual is available and can be downloaded free of charge from www.eaton.com by performing a document search for MN03902002E.

Mounting Plates

The Mounting Plates are designed to help make it easy to install or retrofit the soft starter into enclosures and MCCs. The soft starter can be mounted onto the plate prior to installation. The mounting plate is designed with tear drop mounting holes for easier installation.

Table 27. Mounting Plates

Description	Catalog Number	Price U.S. $
Mounting Plate N Frame	**EMM13N**	61.50
Mounting Plate R Frame	**EMM13R**	85.00
Mounting Plate T, U Frame	**EMM13T**	95.00
Mounting Plate V Frame	**EMM13V**	122.00
Fan/Hood Accessory	**EMM18**	158.00

Adapter Plates

The Adapter Plate allows customers to retrofit a V-Frame 290 mm Soft Starter with the U-Frame 200 mm Soft Starter.

Table 28. Adapter Plates

Description	Catalog Number	Price U.S. $
Adapter Plates ①	**EMM13U**	220.00

① For more information see Pub. 51719.

Vibration Plates

The Vibration Plates allow the soft starter to be applied in high shock and vibration applications. The vibration plate allows vibration up to 5g and shock in up to 40g. The soft starter is mounted onto the vibration plate prior to installation in the panel.

Table 29. Vibration Plates

Description	Catalog Number	Price U.S. $
Vibration Plate N Frame	**EMM14N**	158.00
Vibration Plate R Frame	**EMM14R**	170.00
Vibration Plate T, U Frame	**EMM14T**	196.00
Vibration Plate V Frame	**EMM14V**	228.00

Power Supplies

24V DC Power Supply which can be used with the S811 SSRV or as a stand-alone device.

Table 30. Power Supplies

Description	Catalog Number	Price U.S. $
115V AC Input 24V DC Output	**PSS55A**	262.00
230V AC Input 24V DC Output	**PSS55B**	262.00
380 – 480V AC Input 24V DC Output	**PSS55C**	312.00

DIN Rail Power Supply Mounting Kit (35 mm)

Table 31. DIN Rail Mounting Kit

Description	Catalog Number	Price U.S. $
DIN Rail Mounting Kit (35 mm)	**PSSDIN**	25.00

Standards and Certifications

- IEC 60947-4-2
- EN 60947-4-2
- UL Listed (NMFT) – Frame N37 to V85
- UL Recognized (NMFT2) – Frame V10
- CE Marked
- CSA Certified (3211 06)
- CSA Elevator (2411 01)

Instructional Leaflets

- Instruction Manual: MN03902002E
- Outline Drawings:
  - 65 mm, N-Frame: 10-8574
  - 110 mm, R-Frame: 10-8575
  - 200 mm, T-Frame: 10-8576
  - 200 mm, U-Frame: 10-8857
  - 290 mm, V-Frame: 10-8577

Discount Symbol **1CD1**

Technical Data and Specifications

Table 32. Specifications— *IT.* Soft Starter

Soft Starter (Partial Catalog Number)	S811 N37	S811 N66	S811 R10	S811 R13	S811 T18	S811 T24	S811 T30	S811 U36	S811 U42	S811 U50 ①	S811 V36	S811 V42	S811 V50	S811 V65	S811 V72	S811 V85	S811 V10 ②
Max. Current Capacity	37	66	105	135	180	240	304	360	420	500	360	420	500	650	720	850	1000
FLA Range	11 – 37	20 – 66	32 – 105	42 – 135	56 – 180	75 – 240	95 – 304	112 – 360	131 – 420	156 – 500	112 – 360	131 – 420	156 – 500	203 – 650	225 – 720	265 – 580	320 – 1000
Dimensions																	
Width in Inches (mm)	2.66 (67.6)		4.38 (111.3)		7.67 (194.8)			7.73 (196.3)			11.05 (280.6)						
Height in Inches (mm)	7.38 (187.4)		7.92 (201.2)		12.71 (322.9)			12.72 (323.1)			16.57 (420.8)						
Depth in Inches (mm)	6.47 (164.4)		6.66 (169.2)		6.39 (162.4)			7.08 (179.9)			7.35 (186.6)						
Weight in lbs. (kg)	5.8 (2.6)		10.5 (4.8)		48 (21.8) with lugs 41 (18.6) without lugs			48 (21.8) with lugs 41 (18.6) without lugs			103 (46.8) with lugs 91 (41.4) without lugs						
General Information																	
Bypass Mechanical Lifespan	10M																
Insulating Voltage Ui	660V																
Ramp Time Range	.5 – 180 Seconds (.5 – 360 Seconds Extended Ramp)																
Resistance to Vibration	3g																
Resistance to Shock	15g																
Electrical Information																	
Operating Voltage	200 – 600V																
Operating Frequency	47 – 63 Hz																
Overload Setting	30 – 100%																
Trip Class	5, 10, 20, & 30																
Cabling Capacity (IEC 947)																	
Number of Conductors	1		1		1 or 2			1 or 2			2, 4 or 6						
Wire Sizes	14 – 2		14 – 4/0		4 AWG to 500 MCM			4 AWG to 500 MCM			2/0 to 500 MCM						
Type of Connectors	Box Lug				Add-On Lug Kit												
Control Wiring (12-Pin)																	
Wire Sizes in AWG	22 – 14																
Number of Conductors (Stranded)	2 (or one AWG 12)																
Torque Requirements in lb-in	3.5																
Solid, Stranded or Flexible Max. Size in mm^2	3.31																
Control Power Requirements																	
Voltage Range (24V ± 10%)	21.6 – 26.4																
Steady State Current Amps	1.0		1.0		1.0			1.0			1.4						
Inrush Current Amps	10		10		10			10			10						
Ripple	1%																
Relays (1) Class A and C																	
Voltage AC — maximum	240																
Voltage DC — maximum	120																
Amps — maximum	3																
Environment																	
Temperature — Operating	-30 – 50°C (No derating) Consult factory for operation > 50˚ C																
Temperature — Storage	-50 – 70°C																
Altitude	<2000 Meters — Consult factory for operation > 2000m																
Humidity	<95% Non-condensing																
Operating Position	Any																
Pollution degree IEC947-1	3																
Impulse withstand Voltage IEC947-4-1	6000V																

① U-Frame 500 Amp unit does not have IEC Certification.
② UR Recognized Product.

Dimensions

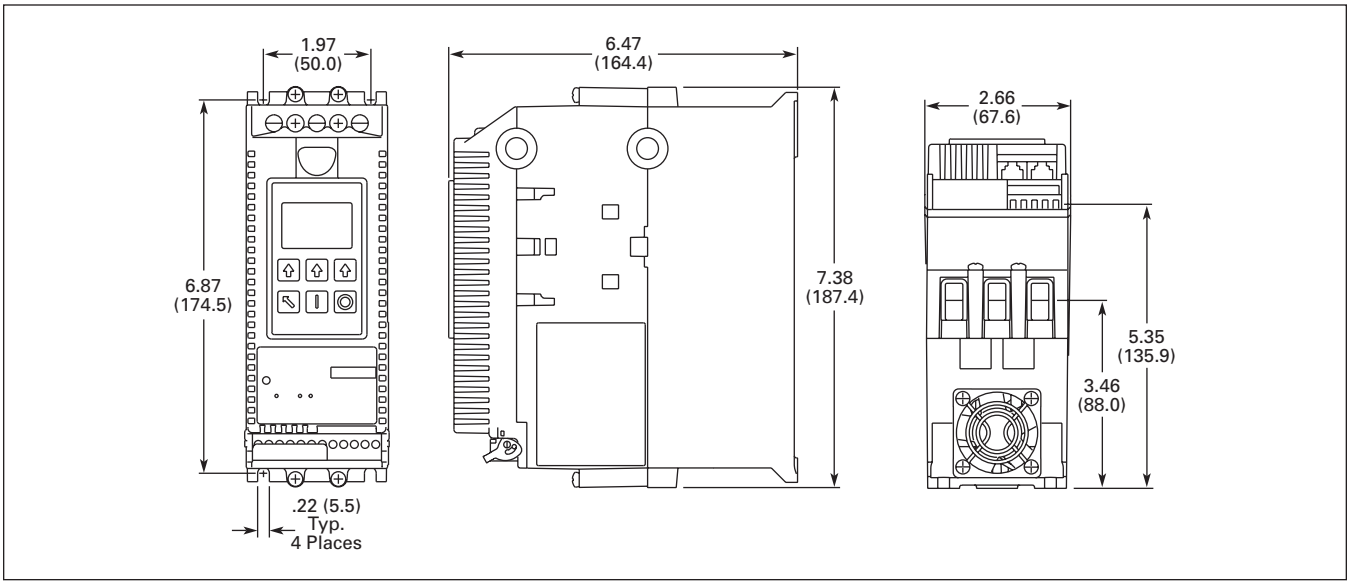

Figure 11. N-Frame (65 mm) S811 Approximate Dimensions in Inches (mm)

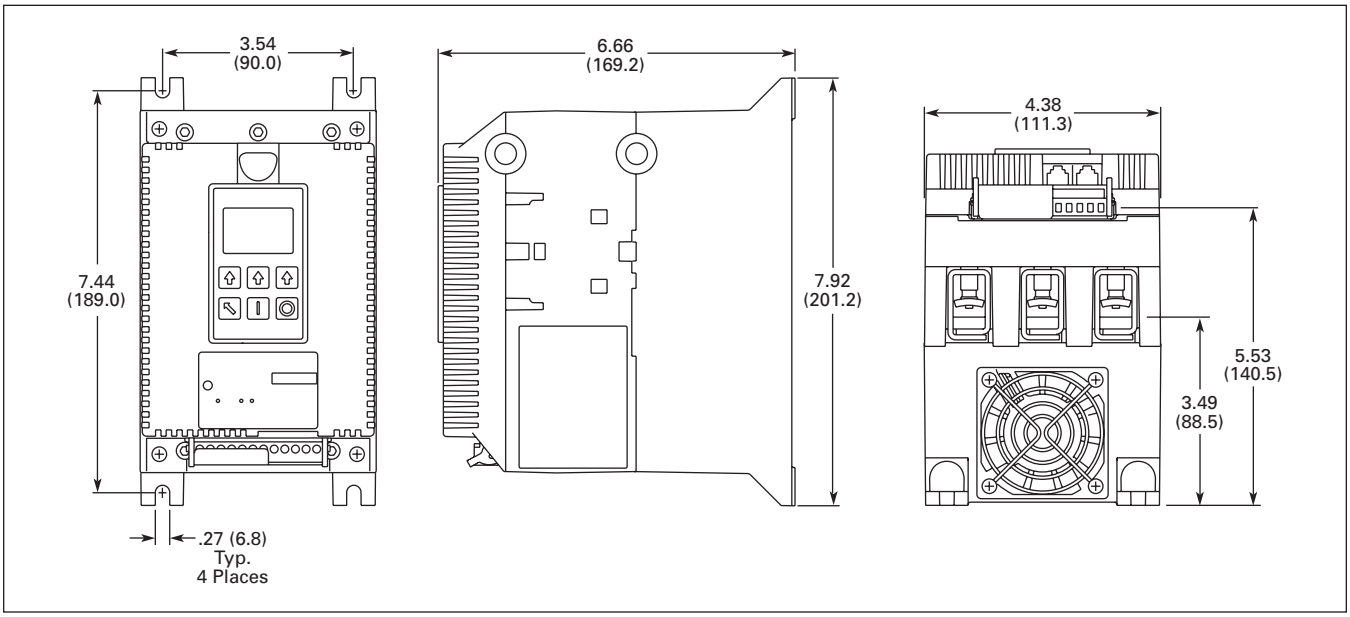

Figure 12. R-Frame (110 mm) S811 Approximate Dimensions in Inches (mm)

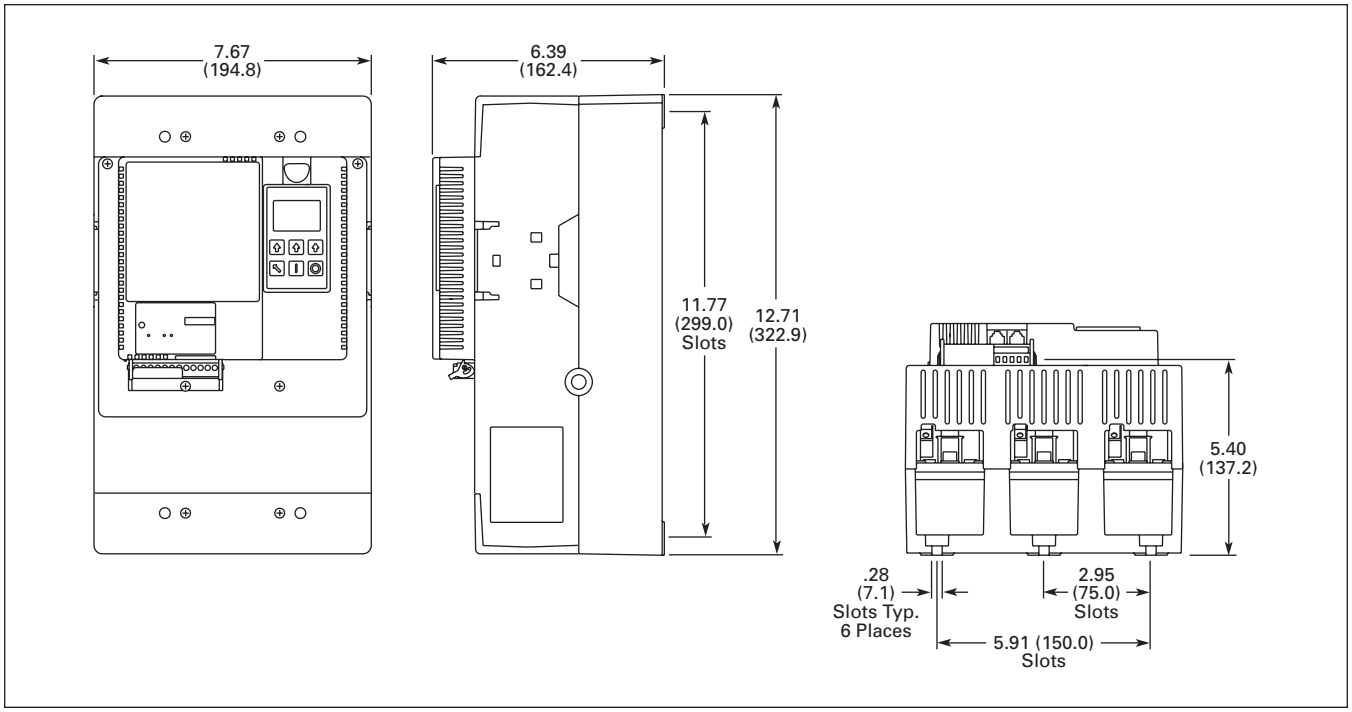

Figure 13. T-Frame (200 mm) S811 Approximate Dimensions in Inches (mm)

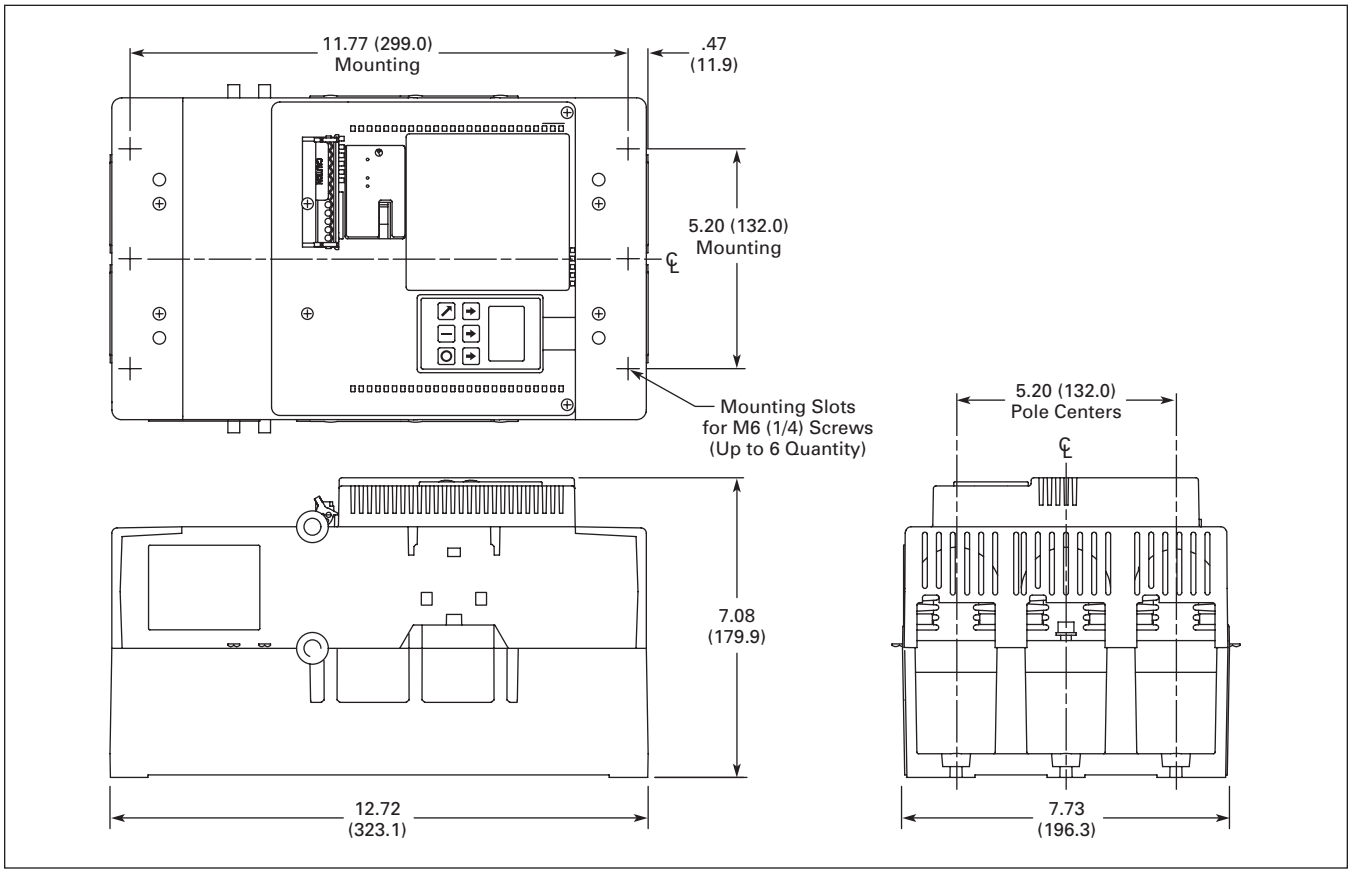

Figure 14. U-Frame (200 mm) S811 Approximate Dimensions in Inches (mm)

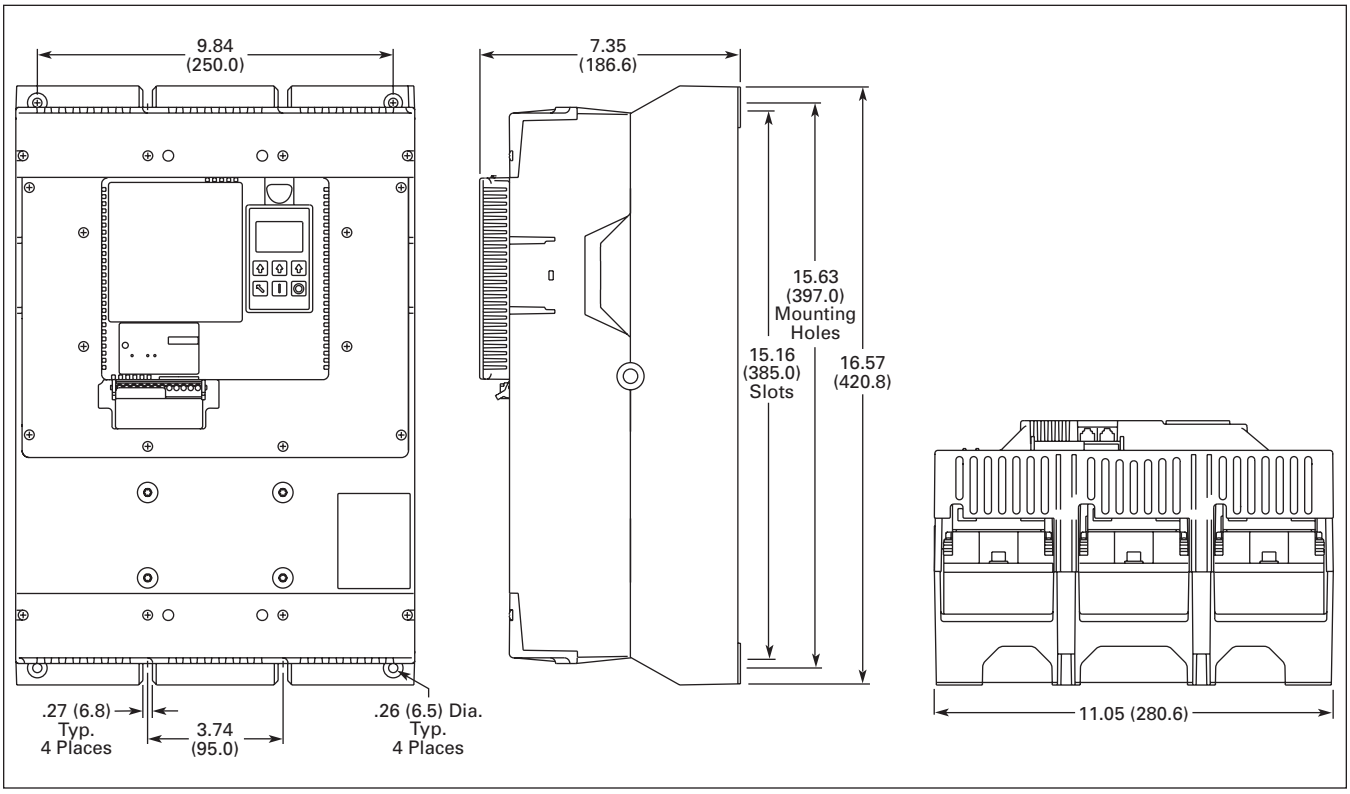

Figure 15. V-Frame (290 mm) S811 Approximate Dimensions in Inches (mm)

Contents

Description *Page*

IT. Solid-State Soft Starters — Enclosed
Product Family Overview 25
Cover Control 26
Catalog Number Selection 27
Non-combination
Product Selection. 28
Combination with Fusible Disconnect
Product Selection. 29
Combination with Breaker
Product Selection. 30
Dimensions 31

Enclosed 40 hp Soft Starter

Product Description

Eaton's revolutionary design for soft starters is shown in the S752, S801 and S811 soft starter products which are members of the Cutler-Hammer® Intelligent Technologies (*IT.*) family of products. These Reduced Voltage Soft Starters are the most compact, multi-functional, easy-to-install products on the market. Their superiority begins with the control package, which features 24V DC control, onboard Digital Signal Processor (DSP), and use of a low impedance run contactor, all of which contribute to the *IT.* Soft Starter's safety, advanced functionality and compact size.

Designed to control acceleration and deceleration of three-phase motors, products are available from .25 to 1000 amps and are suitable for mounting in a variety of enclosures including Type 1, 12, 3R, 4, 4X and 7/9.

- Built-in overload protection
  - Adjustable trip class 5, 10, 20, 30
  - 30 – 100% FLA adjustment
  - Selectable phase loss protection
- Selectable current limit or ramp start
- Adjustable ramp times
  - 0 – 180 seconds standard
  - Extended ramps available
- Adjustable torque control
- Adjustable kick start control
- Soft Stop control
  - 0 – 60 seconds standard
  - Extended times available
- Built-in low impedance contactor
- Six SCR Control in all units
- Selectable phase reversal protection
- Digital Interface Module

Features and Benefits

- Mechanical stress on system
  - Reduced wear on belts, gears, chains, clutches, shafts and bearings. You can get up to 2 – 6 times the life on standard belts by switching to a soft starter.
  - Elimination of water-hammer in pumping applications extends component life and helps limit leakage in system.
  - Lower shock to product on conveyor lines and material handling gear.
  - Able to catch motors and fans on the fly and control their acceleration.
- Electrical system improvements
  - Limits the peak inrush current as required by many local codes.
  - Helps to eliminate sags on the plant electrical grid when starting large loads, thus avoiding brown-out conditions.
- 24V DC advantages
  - Offers improved personnel safety by eliminating the need for 120V AC in the enclosure.
  - Soft Starter able to ride through 50% voltage conditions indefinitely due to 24V DC power supply and 0% for up to 100 mS.
- 690V Option available on 180A ratings and larger

Digital Interface Module

The S811 has an easy to use Digital Interface Module (DIM) that allows the user to configure the device and to read system parameters. The DIM includes an LCD display and keypad to scroll through the various menus. The DIM allows the user to modify control parameters, enable or disable protections, set communication variables, monitor system parameters such as line voltages and currents, and access the fault queue.

Digital Interface Module (DIM)

The DIM can be removed from the S811 and remote mounted. Kits are available to door mount the DIM, enabling users to safely configure, commission, monitor and troubleshoot the system at the electrical panel without opening the enclosure door.

Standards and Certifications

- UL Listed
- IEC 947-4-2
- EN 60947.2 (for motor controller)
- cUL (indicates appropriate CSA Standard investigation)
- ABS Type Approved

Options

Pump Control Option

- Designed to reduce "water-hammer" during start-up and stopping sequences
- Stop ramp extended to 120 seconds to help control larger motors and systems with long piping runs

LCD Display

- 2 line x 20 character LED back-lit LCD display
- NEMA 4 rated
- Parameters
  - Voltage L-L (AB, BC, AC)
  - Phase Current
  - Average Current
  - Overload Current Setting
  - Pole Temperature
  - Relay Trip Class
  - Thermal Pile
  - Average Line Current as % of FLA
  - DC Control Voltage
  - Start Count
  - Fault History
- English or Spanish version

Table 33. Options

Description	Modification Code
Pump Control Option	**P42**
LCD Display	**K5**
Extended Ramp	**R1**

Cover Control

Flange Control Kits

For on-the-job conversion of Type 1, 3R, 4, 4X and 12 enclosed starters. Knock-outs are provided on the Type 1 flange. Type 3R, 4, 4X and 12 have prepunched holes with removable hole plugs.

Factory Installed Pilot Devices

To order factory installed pilot devices, change the 9th character of the Catalog Number to the alpha shown in the table below. Example: to order an **ECS90J4CAA** with START/STOP pushbuttons and a red pilot light, change the **A** to a **C**, i.e. ECS90J4C**C**A.

Table 34. Non-reversing Pilot Devices

Description	Factory Installed Flange Control		Field Installation Kits	
	Position 9 Alpha	Adder U.S. $	Catalog Number	Price U.S. $
No Cover Mounted Pilot Devices	**A**	—	—	—
START/STOP Pushbuttons	**B**	224.00	**C400T1**	99.50
with Red RUN Pilot Light	**C**	408.00	—	—
with Red RUN/Green OFF Lights	**D**	592.00	—	—
ON/OFF Pushbuttons	**E**	224.00	**C400T2**	99.50
with Red RUN Pilot Light	**F**	408.00	—	—
with Red RUN/Green OFF Lights	**G**	592.00	—	—
HAND/OFF/AUTO Selector Switch	**H**	201.00	**C400T12**	99.50
with Red RUN Pilot Light	**J**	385.00	—	—
with Red RUN/Green OFF Lights	**K**	569.00	—	—
START Pushbutton	**L**	224.00	**C400T3**	68.50
ON Pushbutton	**M**	224.00	**C400T4**	68.50
OFF Pushbutton	**N**	224.00	**C400T5**	68.50
Red RUN Pilot Light	**P**	224.00	**C400T9** ①	197.00
Green OFF	**Q**	224.00	**C400T10** ①	197.00
Red RUN/Green OFF Pilot Lights	**R**	368.00	**C400T11** ①	365.00
START/STOP Selector Switch	**S**	201.00	**C400T13**	99.50
with Red RUN Pilot Light	**T**	385.00	—	—
with Red RUN/Green OFF Lights	**U**	569.00	—	—
ON/OFF Selector Switch	**V**	201.00	**C400T14**	99.50
with Red RUN Pilot Light	**W**	385.00	—	—
with Red RUN/Green OFF Lights	**X**	569.00	—	—

① Add Code Letter from the table below to Catalog Number for voltage — Kits only. Example: C400T9**B**.

Rating	Code Letter	Rating	Code Letter	Rating	Code Letter
120V 60 Hz	**A**	240V 60 Hz	**B**	480V 60 Hz	**C**
208V 60 Hz	**E**	380V 50 Hz	**L**	600V 60 Hz	**D**

Discount Symbol **1CD1C**

Catalog Number Selection

Table 35. Solid-State Enclosed Control Catalog Numbering System

E C S 90 S 1 C A A

Type
S = Solid-State

Class	Page
93 = Non-combination S811 ***IT.*** Soft Start with DIM ①	**28**
94 = Combination S811 ***IT.*** Soft Start with Fusible Disconnect and DIM ①	**29**
95 = Combination S811 ***IT.*** Soft Start with HMCP and DIM ①	**30**

Amps			
S752	**S801/S811**		
J = .8	**Q** = 37	**Z** = 240	**5** = 650
K = 1.9	**S** = 66	**1** = 304	**6** = 720
L = 4.4	**V** = 105	**2** = 360	**7** = 850
M = 9	**W** = 135	**3** = 420	**8** = 1000
N = 16	**Y** = 180	**4** = 500	
P = 27			
R = 50			

Enclosure Type
1 = Type 1
2 = Type 3R
3 = Type 4
4 = Type 4X (304-Grade SS)
6 = Type 7/9
8 = Type 12
9 = Type 4X (316-Grade SS)

Voltage	
B = 230V	**E** = 200V
C = 460V	**Q** = 24V DC
D = 575V	

Disconnect Fuse Clip Ratings		
A = None	**G** = 100A/600V R	**N** = 600A/600V R
B = 30A/250V R	**H** = 200A/250V R	**P** = 800A/600V L
C = 30A/600V R	**J** = 200A/600V R	**Q** = 1200A/600V L
D = 60A/250V R	**K** = 400A/250V R	**R** = 1600A/600V L
E = 60A/600V R	**L** = 400A/600V R	**S** = 2000A/600V L
F = 100A/250V R	**M** = 600A/250V R	**T** = by Description
Breaker		
A = None	**F** = 50A	**K** = 400A
B = 3A	**W** = 70A	**L** = 600A
C = 7A	**G** = 100A	**P** = 1200A
D = 15A	**H** = 150A	**Q** = 1600A
E = 30A	**J** = 250A	

Cover Control
See **Table 34** for Options

① DIM = Digital Interface Module.

Table 36. Class ECS93 — S811 *IT.* Soft Starter Enclosures — Non-combination with DIM ⑤

Amps	Motor Voltage	hp ②③	Coil Voltage ①	Type 1	Type 3R	Type 4X ④	Type 7/9	Type 12	Component Soft Starter (Open)
				Catalog Number	Catalog Number	Catalog Number	Catalog Number	Catalog Number	Catalog Number
Frame Size — 65 mm									
37A	200V	10	24V DC	ECS93Q1EAA	ECS93Q2EAA	ECS93Q4EAA	ECS93Q6EAA	ECS93Q8EAA	S811N37N3S
	230V	10		ECS93Q1BAA	ECS93Q2BAA	ECS93Q4BAA	ECS93Q6BAA	ECS93Q8BAA	
	460V	25		ECS93Q1CAA	ECS93Q2CAA	ECS93Q4CAA	ECS93Q6CAA	ECS93Q8CAA	
	575V	30		ECS93Q1DAA	ECS93Q2DAA	ECS93Q4DAA	ECS93Q6DAA	ECS93Q8DAA	
66A	200V	20	24V DC	ECS93S1EAA	ECS93S2EAA	ECS93S4EAA	ECS93S6EAA	ECS93S8EAA	S811N66N3S
	230V	20		ECS93S1BAA	ECS93S2BAA	ECS93S4BAA	ECS93S6BAA	ECS93S8BAA	
	460V	50		ECS93S1CAA	ECS93S2CAA	ECS93S4CAA	ECS93S6CAA	ECS93S8CAA	
	575V	60		ECS93S1DAA	ECS93S2DAA	ECS93S4DAA	ECS93S6DAA	ECS93S8DAA	
Frame Size — 110 mm									
105A	200V	30	24V DC	ECS93V1EAA	ECS93V2EAA	ECS93V4EAA	ECS93V6EAA	ECS93V8EAA	S811R10N3S
	230V	40		ECS93V1BAA	ECS93V2BAA	ECS93V4BAA	ECS93V6BAA	ECS93V8BAA	
	460V	75		ECS93V1CAA	ECS93V2CAA	ECS93V4CAA	ECS93V6CAA	ECS93V8CAA	
	575V	100		ECS93V1DAA	ECS93V2DAA	ECS93V4DAA	ECS93V6DAA	ECS93V8DAA	
135A	200V	40	24V DC	ECS93W1EAA	ECS93W2EAA	ECS93W4EAA	ECS93W6EAA	ECS93W8EAA	S811R13N3S
	230V	50		ECS93W1BAA	ECS93W2BAA	ECS93W4BAA	ECS93W6BAA	ECS93W8BAA	
	460V	100		ECS93W1CAA	ECS93W2CAA	ECS93W4CAA	ECS93W6CAA	ECS93W8CAA	
	575V	125		ECS93W1DAA	ECS93W2DAA	ECS93W4DAA	ECS93W6DAA	ECS93W8DAA	
Frame Size — 200 mm									
180A	200V	60	24V DC	ECS93Y1EAA	ECS93Y2EAA	ECS93Y4EAA	ECS93Y6EAA	ECS93Y8EAA	S811T18N3S
	230V	60		ECS93Y1BAA	ECS93Y2BAA	ECS93Y4BAA	ECS93Y6BAA	ECS93Y8BAA	
	460V	150		ECS93Y1CAA	ECS93Y2CAA	ECS93Y4CAA	ECS93Y6CAA	ECS93Y8CAA	
	575V	150		ECS93Y1DAA	ECS93Y2DAA	ECS93Y4DAA	ECS93Y6DAA	ECS93Y8DAA	
240A	200V	75	24V DC	ECS93Z1EAA	ECS93Z2EAA	ECS93Z4EAA	ECS93Z6EAA	ECS93Z8EAA	S811T24N3S
	230V	75		ECS93Z1BAA	ECS93Z2BAA	ECS93Z4BAA	ECS93Z6BAA	ECS93Z8BAA	
	460V	200		ECS93Z1CAA	ECS93Z2CAA	ECS93Z4CAA	ECS93Z6CAA	ECS93Z8CAA	
	575V	200		ECS93Z1DAA	ECS93Z2DAA	ECS93Z4DAA	ECS93Z6DAA	ECS93Z8DAA	
304A	200V	100	24V DC	ECS9311EAA	ECS9312EAA	ECS9314EAA	ECS9316EAA	ECS9318EAA	S811T30N3S
	230V	100		ECS9311BAA	ECS9312BAA	ECS9314BAA	ECS9316BAA	ECS9318BAA	
	460V	250		ECS9311CAA	ECS9312CAA	ECS9314CAA	ECS9316CAA	ECS9318CAA	
	575V	300		ECS9311DAA	ECS9312DAA	ECS9314DAA	ECS9316DAA	ECS9318DAA	
Frame Size — 290 mm									
360A	200V	125	24V DC	ECS9321EAA	ECS9322EAA	ECS9324EAA	ECS9326EAA	ECS9328EAA	S811V36N3S
	230V	150		ECS9321BAA	ECS9322BAA	ECS9324BAA	ECS9326BAA	ECS9328BAA	
	460V	300		ECS9321CAA	ECS9322CAA	ECS9324CAA	ECS9326CAA	ECS9328CAA	
	575V	350		ECS9321DAA	ECS9322DAA	ECS9324DAA	ECS9326DAA	ECS9328DAA	
420A	200V	150	24V DC	ECS9331EAA	ECS9332EAA	ECS9334EAA	ECS9336EAA	ECS9338EAA	S811V42N3S
	230V	175		ECS9331BAA	ECS9332BAA	ECS9334BAA	ECS9336BAA	ECS9338BAA	
	460V	350		ECS9331CAA	ECS9332CAA	ECS9334CAA	ECS9336CAA	ECS9338CAA	
	575V	450		ECS9331DAA	ECS9332DAA	ECS9334DAA	ECS9336DAA	ECS9338DAA	
500A	200V	150	24V DC	ECS9341EAA	ECS9342EAA	ECS9344EAA	ECS9346EAA	ECS9348EAA	S811V50N3S
	230V	200		ECS9341BAA	ECS9342BAA	ECS9344BAA	ECS9346BAA	ECS9348BAA	
	460V	400		ECS9341CAA	ECS9342CAA	ECS9344CAA	ECS9346CAA	ECS9348CAA	
	575V	500		ECS9341DAA	ECS9342DAA	ECS9344DAA	ECS9346DAA	ECS9348DAA	
650A	200V	250	24V DC	ECS9351EAA	ECS9352EAA	ECS9354EAA	ECS9356EAA	ECS9358EAA	S811V65N3S
	230V	250		ECS9351BAA	ECS9352BAA	ECS9354BAA	ECS9356BAA	ECS9358BAA	
	460V	500		ECS9351CAA	ECS9352CAA	ECS9354CAA	ECS9356CAA	ECS9358CAA	
	575V	600		ECS9351DAA	ECS9352DAA	ECS9354DAA	ECS9356DAA	ECS9358DAA	
720A	230V	300	24V DC	ECS9361BAA	ECS9362BAA	ECS9364BAA	ECS9366BAA	ECS9368BAA	S811V72N3S
	460V	600		ECS9361CAA	ECS9362CAA	ECS9364CAA	ECS9366CAA	ECS9368CAA	
	575V	700		ECS9361DAA	ECS9362DAA	ECS9364DAA	ECS9366DAA	ECS9368DAA	
850A	230V	350	24V DC	ECS9371BAA	ECS9372BAA	ECS9374BAA	ECS9376BAA	ECS9378BAA	S811V85N3S
	460V	700		ECS9371CAA	ECS9372CAA	ECS9374CAA	ECS9376CAA	ECS9378CAA	
	575V	900		ECS9371DAA	ECS9372DAA	ECS9374DAA	ECS9376DAA	ECS9378DAA	
1000A	230V	400	24V DC	ECS9381BAA	ECS9382BAA	ECS9384BAA	ECS9386BAA	ECS9388BAA	S811V10N3S
	460V	800		ECS9381CAA	ECS9382CAA	ECS9384CAA	ECS9386CAA	ECS9388CAA	
	575V	1000		ECS9381DAA	ECS9382DAA	ECS9384DAA	ECS9386DAA	ECS9388DAA	

① All *IT.* soft starters are furnished with 24V DC coils and control power supplies. For 24V DC separate control, use Mod Code **C35** and change the 8th digit to **Q** (i.e. ECS90S1EAA becomes ECS90S1**Q**AA-**C35**).

② Standard duty horsepower ratings are for 300% ramp current, 30 seconds ramp time, and 3 starts per hour. Consult Eaton for other ratings.

③ Based on 1.0 Service Factor. For 1.15 consult Eaton.

④ These are the Catalog Numbers for Type 4X 304-Grade Stainless Steel, as indicated by the seventh digit **4**. Example: ECS93S**4**EAA. To order Type 4X 316-Grade Stainless Steel, change that digit to **9**. To order Type 4 Painted Steel, change that digit to **3**. To order Nonmetallic, change that digit to **5**.

⑤ Digital Interface Module (DIM) is mounted on door as standard.

Cover Control ..... **Page 26**
Dimensions ..... **Page 31**
Accessories ..... **Page 19**
Technical Data ..... **Page 21**

Table 37. Class ECS94 – S811 *IT.* Soft Starter Enclosures — Combination with Fusible Disconnect and DIM ⑥

Amps	Motor Voltage	hp ②③	Coil Voltage ①	Switch Rating	Type 1	Type 3R	Type 4X ④	Type 12	Component Soft Starter (Open)
					Catalog Number	Catalog Number	Catalog Number	Catalog Number	Catalog Number
Frame Size — 65 mm									
37A	200V	3 10	24V DC	30A 60A	ECS94Q1EAB ECS94Q1EAD	ECS94Q2EAB ECS94Q2EAD	ECS94Q4EAB ECS94Q4EAD	ECS94Q8EAB ECS94Q8EAD	S811N37N3S
	230V	7-1/2 10		30A 60A	ECS94Q1BAB ECS94Q1BAD	ECS94Q2BAB ECS94Q2BAD	ECS94Q4BAB ECS94Q4BAD	ECS94Q8BAB ECS94Q8BAD	S811N37N3S
	460V	15 25		30A 60A	ECS94Q1CAC ECS94Q1CAE	ECS94Q2CAC ECS94Q2CAE	ECS94Q4CAC ECS94Q4CAE	ECS94Q8CAC ECS94Q8CAE	S811N37N3S
	575V	20 30		30A 60A	ECS94Q1DAC ECS94Q1DAE	ECS94Q2DAC ECS94Q2DAE	ECS94Q4DAC ECS94Q4DAE	ECS94Q8DAC ECS94Q8DAE	S811N37N3S
66A	200V	10 20	24V DC	60A 100A	ECS94S1EAD ECS94S1EAF	ECS94S2EAD ECS94S2EAF	ECS94S4EAD ECS94S4EAF	ECS94S8EAD ECS94S8EAF	S811N66N3S
	230V	15 20		60A 100A	ECS94S1BAD ECS94S1BAF	ECS94S2BAD ECS94S2BAF	ECS94S4BAD ECS94S4BAF	ECS94S8BAD ECS94S8BAF	S811N66N3S
	460V	50		100A	ECS94S1CAG	ECS94S2CAG	ECS94S4CAG	ECS94S8CAG	S811N66N3S
	575V	40 60		60A 100A	ECS94S1DAE ECS94S1DAG	ECS94S2DAE ECS94S2DAG	ECS94S4DAE ECS94S4DAG	ECS94S8DAE ECS94S8DAG	S811N66N3S
Frame Size — 110 mm									
105A	200V 230V 460V 575V	30 40 75 100	24V DC	200A 200A 200A 200A	ECS94V1EAH ECS94V1BAH ECS94V1CAJ ECS94V1DAJ	ECS94V2EAH ECS94V2BAH ECS94V2CAJ ECS94V2DAJ	ECS94V4EAH ECS94V4BAH ECS94V4CAJ ECS94V4DAJ	ECS94V8EAH ECS94V8BAH ECS94V8CAJ ECS94V8DAJ	S811R10N3S
135A	200V 230V 460V 575V	40 50 100 125	24V DC	200A 200A 200A 200A	ECS94W1EAH ECS94W1BAH ECS94W1CAJ ECS94W1DAJ	ECS94W2EAH ECS94W2BAH ECS94W2CAJ ECS94W2DAJ	ECS94W4EAH ECS94W4BAH ECS94W4CAJ ECS94W4DAJ	ECS94W8EAH ECS94W8BAH ECS94W8CAJ ECS94W8DAJ	S811R13N3S
Frame Size — 200 mm									
180A	200V 230V 460V 575V	60 60 150 150	24V DC	400A 400A 400A 400A	ECS94Y1EAK ECS94Y1BAK ECS94Y1CAL ECS94Y1DAL	ECS94Y2EAK ECS94Y2BAK ECS94Y2CAL ECS94Y2DAL	ECS94Y4EAK ECS94Y4BAK ECS94Y4CAL ECS94Y4DAL	ECS94Y8EAK ECS94Y8BAK ECS94Y8CAL ECS94Y8DAL	S811T18N3S
240A	200V 230V 460V 575V	75 75 200 200	24V DC	400A 400A 400A 400A	ECS94Z1EAK ECS94Z1BAK ECS94Z1CAL ECS94Z1DAL	ECS94Z2EAK ECS94Z2BAK ECS94Z2CAL ECS94Z2DAL	ECS94Z4EAK ECS94Z4BAK ECS94Z4CAL ECS94Z4DAL	ECS94Z8EAK ECS94Z8BAK ECS94Z8CAL ECS94Z8DAL	S811T24N3S
304A	200V 230V 460V 575V	100 100 250 300	24V DC	400A 400A 400A 400A	ECS9411EAK ECS9411BAK ECS9411CAL ECS9411DAL	ECS9412EAK ECS9412BAK ECS9412CAL ECS9412DAL	ECS9414EAK ECS9414BAK ECS9414CAL ECS9414DAL	ECS9418EAK ECS9418BAK ECS9418CAL ECS9418DAL	S811T30N3S
Frame Size — 290 mm									
360A	200V 230V 460V 575V	125 125 300 350	24V DC	600A 600A 600A 600A	ECS9421EAM ECS9421BAM ECS9421CAN ECS9421DAN	ECS9422EAM ECS9422BAM ECS9422CAN ECS9422DAN	ECS9424EAM ECS9424BAM ECS9424CAN ECS9424DAN	ECS9428EAM ECS9428BAM ECS9428CAN ECS9428DAN	S811V36N3S
420A	200V 230V 460V 575V	150 150 350 450	24V DC	600A 600A 600A 600A	ECS9431EAM ECS9431BAM ECS9431CAN ECS9431DAN	ECS9432EAM ECS9432BAM ECS9432CAN ECS9432DAN	ECS9434EAM ECS9434BAM ECS9434CAN ECS9434DAN	ECS9438EAM ECS9438BAM ECS9438CAN ECS9438DAN	S811V42N3S
500A	200V 230V 460V 575V	150 200 400 500	24V DC	800A 800A 800A 800A	ECS9441EAP ECS9441BAP ECS9441CAP ECS9441DAP	ECS9442EAP ECS9442BAP ECS9442CAP ECS9442DAP	ECS9444EAP ECS9444BAP ECS9444CAP ECS9444DAP	ECS9448EAP ECS9448BAP ECS9448CAP ECS9448DAP	S811V50N3S
650A	460V 575V	500 600	24V DC	800A 800A	ECS9451CAP ECS9451DAP	ECS9452CAP ECS9452DAP	ECS9454CAP ECS9454DAP	ECS9458CAP ECS9458DAP	S811V65N3S
720A	460V 575V	600 700	24V DC	1200A 1200A	ECS9461CAQ ECS9461DAQ	ECS9462CAQ ECS9462DAQ	ECS9464CAQ ECS9464DAQ	ECS9468CAQ ECS9468DAQ	S811V72N3S
850A	460V 575V	700 800	24V DC	1600A 1600A	ECS9471CAR ECS9471DAR	ECS9472CAR ECS9472DAR	ECS9474CAR ECS9474DAR	ECS9478CAR ECS9478DAR	S811V85N3S
1000A	230V 460V 575V	400 800 1000	24V DC	⑤ ⑤ ⑤	ECS9481BA_ ⑤ ECS9481CA_ ⑤ ECS9481DA_ ⑤	ECS9482BA_ ⑤ ECS9482CA_ ⑤ ECS9482DA_ ⑤	ECS9484BA_ ⑤ ECS9484CA_ ⑤ ECS9484DA_ ⑤	ECS9488BA_ ⑤ ECS9488CA_ ⑤ ECS9488DA_ ⑤	S811V10N3S

① All *IT.* soft starters are furnished with 24V DC coils and control power supplies. For 24V DC separate control, use Mod Code **C35** and change the 8th digit to **Q** (i.e. ECS90S1EAA becomes ECS90S1**Q**AA-**C35**).

② Standard duty horsepower ratings are for 300% ramp current, 30 seconds ramp time, and 3 starts per hour. Consult Eaton for other ratings.

③ Based on 1.0 Service Factor. For 1.15 consult Eaton.

④ These are the Catalog Numbers for Type 4X 304-Grade Stainless Steel, as indicated by the seventh digit **4**. Example: ECS94S**4**EAA. To order Type 4X 316-Grade Stainless Steel, change that digit to **9**. To order Type 4 Painted Steel, change that digit to **3**. To order Nonmetallic, change that digit to **5**.

⑤ Consult Eaton.

⑥ Digital Interface Module (DIM) is mounted on door as standard.

Cover Control ..... **Page 26**
Dimensions ..... **Page 31**
Accessories..... **Page 19**
Technical Data ..... **Page 21**

Table 38. Class ECS95 — S811 *IT.* Soft Starter Enclosures — Combination with Breaker and DIM ⑤

Amps	Motor Voltage	hp ②③ 1.0 S.F.	Coil Voltage ①	Circuit Breaker Type	Type 1 Catalog Number	Type 3R Catalog Number	Type 4X ④ Catalog Number	Type 7/9 Catalog Number	Type 12 Catalog Number	Component Soft Starter (Open) Catalog Number
Frame Size 65 mm										
37A	200V	1/2 1 3 10	24V DC	7A 15A 30A 50A	**ECS95Q1EAC** **ECS95Q1EAD** **ECS95Q1EAE** **ECS95Q1EAF**	**ECS95Q2EAC** **ECS95Q2EAD** **ECS95Q2EAE** **ECS95Q2EAF**	**ECS95Q4EAC** **ECS95Q4EAD** **ECS95Q4EAE** **ECS95Q4EAF**	**ECS95Q6EAC** **ECS95Q6EAD** **ECS95Q6EAE** **ECS95Q6EAF**	**ECS95Q8EAC** **ECS95Q8EAD** **ECS95Q8EAE** **ECS95Q8EAF**	**S811N37N3S**
	230V	1 2 3 10	24V DC	7A 15A 30A 50A	**ECS95Q1BAC** **ECS95Q1BAD** **ECS95Q1BAE** **ECS95Q1BAF**	**ECS95Q2BAC** **ECS95Q2BAD** **ECS95Q2BAE** **ECS95Q2BAF**	**ECS95Q4BAC** **ECS95Q4BAD** **ECS95Q4BAE** **ECS95Q4BAF**	**ECS95Q6BAC** **ECS95Q6BAD** **ECS95Q6BAE** **ECS95Q6BAF**	**ECS95Q8BAC** **ECS95Q8BAD** **ECS95Q8BAE** **ECS95Q8BAF**	**S811N37N3S**
	460V	3/4 2 5 10 25	24V DC	3A 7A 15A 30A 50A	**ECS95Q1CAB** **ECS95Q1CAC** **ECS95Q1CAD** **ECS95Q1CAE** **ECS95Q1CAF**	**ECS95Q2CAB** **ECS95Q2CAC** **ECS95Q2CAD** **ECS95Q2CAE** **ECS95Q2CAF**	**ECS95Q4CAB** **ECS95Q4CAC** **ECS95Q4CAD** **ECS95Q4CAE** **ECS95Q4CAF**	**ECS95Q6CAB** **ECS95Q6CAC** **ECS95Q6CAD** **ECS95Q6CAE** **ECS95Q6CAF**	**ECS95Q8CAB** **ECS95Q8CAC** **ECS95Q8CAD** **ECS95Q8CAE** **ECS95Q8CAF**	**S811N37N3S**
	575V	1 3 7-1/2 15 30	24V DC	3A 7A 15A 30A 50A	**ECS95Q1DAB** **ECS95Q1DAC** **ECS95Q1DAD** **ECS95Q1DAE** **ECS95Q1DAF**	**ECS95Q2DAB** **ECS95Q2DAC** **ECS95Q2DAD** **ECS95Q2DAE** **ECS95Q2DAF**	**ECS95Q4DAB** **ECS95Q4DAC** **ECS95Q4DAD** **ECS95Q4DAE** **ECS95Q4DAF**	**ECS95Q6DAB** **ECS95Q6DAC** **ECS95Q6DAD** **ECS95Q6DAE** **ECS95Q6DAF**	**ECS95Q8DAB** **ECS95Q8DAC** **ECS95Q8DAD** **ECS95Q8DAE** **ECS95Q8DAF**	**S811N37N3S**
66A	200V	10 20	24V DC	50A 100A	**ECS95S1EAF** **ECS95S1EAG**	**ECS95S2EAF** **ECS95S2EAG**	**ECS95S4EAF** **ECS95S4EAG**	**ECS95S6EAF** **ECS95S6EAG**	**ECS95S8EAF** **ECS95S8EAG**	**S811N66N3S**
	230V	15 20	24V DC	70A 100A	**ECS95S1BAW** **ECS95S1BAG**	**ECS95S2BAW** **ECS95S2BAG**	**ECS95S4BAW** **ECS95S4BAG**	**ECS95S6BAW** **ECS95S6BAG**	**ECS95S8BAW** **ECS95S8BAG**	**S811N66N3S**
	460V	50	24V DC	100A	**ECS95S1CAG**	**ECS95S2CAG**	**ECS95S4CAG**	**ECS95S6CAG**	**ECS95S8CAG**	**S811N66N3S**
	575V	60	24V DC	100A	**ECS95S1DAG**	**ECS95S2DAG**	**ECS95S4DAG**	**ECS95S6DAG**	**ECS95S8DAG**	**S811N66N3S**
Frame Size 110 mm										
105A	200V	30	24V DC	150A	**ECS95V1EAH**	**ECS95V2EAH**	**ECS95V4EAH**	**ECS95V6EAH**	**ECS95V8EAH**	**S811R10N3S**
	230V	40	24V DC	150A	**ECS95V1BAH**	**ECS95V2BAH**	**ECS95V4BAH**	**ECS95V6BAH**	**ECS95V8BAH**	**S811R10N3S**
	460V	75	24V DC	150A	**ECS95V1CAH**	**ECS95V2CAH**	**ECS95V4CAH**	**ECS95V6CAH**	**ECS95V8CAH**	**S811R10N3S**
	575V	100	24V DC	150A	**ECS95V1DAH**	**ECS95V2DAH**	**ECS95V4DAH**	**ECS95V6DAH**	**ECS95V8DAH**	**S811R10N3S**
135A	200V 230V 460V 575V	40 50 100 125	24V DC	150A 150A 150A 150A	**ECS95W1EAH** **ECS95W1BAH** **ECS95W1CAH** **ECS95W1DAH**	**ECS95W2EAH** **ECS95W2BAH** **ECS95W2CAH** **ECS95W2DAH**	**ECS95W4EAH** **ECS95W4BAH** **ECS95W4CAH** **ECS95W4DAH**	**ECS95W6EAH** **ECS95W6BAH** **ECS95W6CAH** **ECS95W6DAH**	**ECS95W8EAH** **ECS95W8BAH** **ECS95W8CAH** **ECS95W8DAH**	**S811R13N3S**
Frame Size 200 mm										
180A	200V 230V 460V 575V	60 60 150 150	24V DC	250A 250A 250A 250A	**ECS95Y1EAJ** **ECS95Y1BAJ** **ECS95Y1CAJ** **ECS95Y1DAJ**	**ECS95Y2EAJ** **ECS95Y2BAJ** **ECS95Y2CAJ** **ECS95Y2DAJ**	**ECS95Y4EAJ** **ECS95Y4BAJ** **ECS95Y4CAJ** **ECS95Y4DAJ**	**ECS95Y6EAJ** **ECS95Y6BAJ** **ECS95Y6CAJ** **ECS95Y6DAJ**	**ECS95Y8EAJ** **ECS95Y8BAJ** **ECS95Y8CAJ** **ECS95Y8DAJ**	**S811T18N3S**
240A	200V 230V 460V 575V	75 75 200 200	24V DC	400A 250A 400A 250A	**ECS95Z1EAK** **ECS95Z1BAJ** **ECS95Z1CAK** **ECS95Z1DAJ**	**ECS95Z2EAK** **ECS95Z2BAJ** **ECS95Z2CAK** **ECS95Z2DAJ**	**ECS95Z4EAK** **ECS95Z4BAJ** **ECS95Z4CAK** **ECS95Z4DAJ**	**ECS95Z6EAK** **ECS95Z6BAJ** **ECS95Z6CAK** **ECS95Z6DAJ**	**ECS95Z8EAK** **ECS95Z8BAJ** **ECS95Z8CAK** **ECS95Z8DAJ**	**S811T24N3S**
304A	200V 230V 460V 575V	100 100 250 300	24V DC	400A 400A 400A 400A	**ECS9511EAK** **ECS9511BAK** **ECS9511CAK** **ECS9511DAK**	**ECS9512EAK** **ECS9512BAK** **ECS9512CAK** **ECS9512DAK**	**ECS9514EAK** **ECS9514BAK** **ECS9514CAK** **ECS9514DAK**	**ECS9516EAK** **ECS9516BAK** **ECS9516CAK** **ECS9516DAK**	**ECS9518EAK** **ECS9518BAK** **ECS9518CAK** **ECS9518DAK**	**S811T30N3S**

① All *IT.* soft starters are furnished with 24V DC coils and control power supplies. For 24V DC separate control, use Mod Code **C35** and change the 8th digit to **Q** (i.e. ECS90S1EAA becomes ECS90S1**Q**AA-**C35**).

② Standard duty horsepower ratings are for 300% ramp current, 30 seconds ramp time, and 3 starts per hour. Consult Eaton for other ratings.

③ Based on 1.0 Service Factor. For 1.15 consult Eaton.

④ These are the Catalog Numbers for Type 4X 304-Grade Stainless Steel, as indicated by the seventh digit **4**. Example: ECS95S**4**EAA. To order Type 4X 316-Grade Stainless Steel, change that digit to **9**. To order Type 4 Painted Steel, change that digit to **3**. To order Nonmetallic, change that digit to **5**.

⑤ Digital Interface Module (DIM) is mounted on door as standard.

Options ..... **Page 26**
Cover Control ..... **Page 26**
Dimensions ..... **Page 31**
Accessories ..... **Page 19**
Technical Data ..... **Page 21**

Table 38. Class ECS95 — S811 *IT.* Soft Starter Enclosures — Combination with Breaker and DIM ⑤ (Continued)

Amps	Motor Voltage	hp ②③ 1.0 S.F.	Coil Voltage ①	Circuit Breaker Type	Type 1 Catalog Number	Type 3R Catalog Number	Type 4X ④ Catalog Number	Type 7/9 Catalog Number	Type 12 Catalog Number	Component Soft Starter (Open) Catalog Number
Frame Size 290 mm										
360A	200V	125	24V DC	HMCP 600A	**ECS9521EAL**	**ECS9522EAL**	**ECS9524EAL**	—	**ECS9528EAL**	**S811V36N3S**
	230V	150		HMCP 400A	**ECS9521BAK**	**ECS9522BAK**	**ECS9524BAK**	—	**ECS9528BAK**	
	460V	300		HMCP 600A	**ECS9521CAL**	**ECS9522CAL**	**ECS9524CAL**	—	**ECS9528CAL**	
	575V	350		HMCP 400A	**ECS9521DAK**	**ECS9522DAK**	**ECS9524DAK**	—	**ECS9528DAK**	
420A	200V	150	24V DC	HMCP 600A	**ECS9531EAL**	**ECS9532EAL**	**ECS9534EAL**	—	**ECS9538EAL**	**S811V42N3S**
	460V	350		HMCP 600A	**ECS9531CAL**	**ECS9532CAL**	**ECS9534CAL**	—	**ECS9538CAL**	
	575V	450		HMCP 600A	**ECS9531DAL**	**ECS9532DAL**	**ECS9534DAL**	—	**ECS9538DAL**	
500A	230V	200	24V DC	HMCP 600A	**ECS9541BAL**	**ECS9542BAL**	**ECS9544BAL**	—	**ECS9548BAL**	**S811V50N3S**
	460V	400		HMCP 600A	**ECS9541CAL**	**ECS9542CAL**	**ECS9544CAL**	—	**ECS9548CAL**	
	575V	500		HMCP 600A	**ECS9541DAL**	**ECS9542DAL**	**ECS9544DAL**	—	**ECS9548DAL**	
650A	200V	200	24V DC	HMCP 1200A	**ECS9551EAP**	**ECS9552EAP**	**ECS9554EAP**	—	**ECS9558EAP**	**S811V65N3S**
	230V	250		HMCP 1200A	**ECS9551BAP**	**ECS9552BAP**	**ECS9554BAP**	—	**ECS9558BAP**	
	460V	450		HMCP 600A	**ECS9551CAL**	**ECS9552CAL**	**ECS9554CAL**	—	**ECS9558CAL**	
	460V	500		HMCP 1200A	**ECS9551CAP**	**ECS9552CAP**	**ECS9554CAP**	—	**ECS9558CAP**	
	575V	600		HMCP 1200A	**ECS9551DAP**	**ECS9552DAP**	**ECS9554DAP**	—	**ECS9558DAP**	
720A	230V	300	24V DC	HMCP 1200A	**ECS9561BAP**	**ECS9562BAP**	**ECS9564BAP**	—	**ECS9568BAP**	**S811V72N3S**
	460V	600		HMCP 1200A	**ECS9561CAP**	**ECS9562CAP**	**ECS9564CAP**	—	**ECS9568CAP**	
	575V	700		HMCP 1200A	**ECS9561DAP**	**ECS9562DAP**	**ECS9564DAP**	—	**ECS9568DAP**	
850A	460V	700	24V DC	HMCP 1200A	**ECS9571CAP**	**ECS9572CAP**	**ECS9574CAP**	—	**ECS9578CAP**	**S811V85N3S**
	575V	800		HMCP 1200A	**ECS9571DAP**	**ECS9572DAP**	**ECS9574DAP**	—	**ECS9578DAP**	
1000A	230V	400	24V DC	RD 1600	**ECS9581BAQ**	**ECS9582BAQ**	**ECS9584BAQ**	—	**ECS9588BAQ**	**S811V10N3S**
	460V	800		RD 1600	**ECS9581CAQ**	**ECS9582CAQ**	**ECS9584CAQ**	—	**ECS9588CAQ**	
	575V	1000		RD 1600	**ECS9581DAQ**	**ECS9582DAQ**	**ECS9584DAQ**	—	**ECS9588DAQ**	

① All ***IT.*** soft starters are furnished with 24V DC coils and control power supplies. For 24V DC separate control, use Mod Code **C35** and change the 8th digit to **Q** (i.e. ECS92S1EAF becomes ECS92S1**Q**AF-**C35**).

② Standard duty horsepower ratings are for 300% ramp current, 30 seconds ramp time, and 3 starts per hour. Consult Eaton for other ratings.

③ Based on 1.0 Service Factor. For 1.15 consult Eaton.

④ These are the Catalog Numbers for Type 4X 304-Grade Stainless Steel, as indicated by the seventh digit **4**. Example: ECS95S**4**EAA. To order Type 4X 316-Grade Stainless Steel, change that digit to **9**. To order Type 4 Painted Steel, change that digit to **3**. To order Nonmetallic, change that digit to **5**.

⑤ Digital Interface Module (DIM) is mounted on door as standard.

Dimensions

Table 39. Minimum Enclosure Box Numbers

Rating	SSRV	Non-combination Box No. ⑥	Combination with Fuses Box No. ⑥	Combination with HMCP Box No. ⑥
.8 – 27A	S752	6A ⑦	B1 ⑧	A1 ⑨
37A	S801/S811	7A	B1	A1 ⑨
50A	S752	6A ⑦	C	A1 ⑨
66A	S801/S811	7A	C	A1 ⑨
105A	S801/S811	7A	D	B1
135A	S801/S811	B1	D	C
180A	S801/S811	C	E	E
240A	S801/S811	G1	F1E	E
304A	S801/S811	G1	F1E	E
360A	S801/S811	G1	F1E	E
420A	S801/S811	10	F1E	E
500A	S801/S811	10	F1E	E
650A	S801/S811	10	F1E	F1E
720A	S801/S811	10	F1E	F1E
850A	S801/S811	10	F1E	F1E
1000A	S801/S811	10	F1E	F1E

⑥ Enclosure space will also accommodate for an ***IT.*** Power Supply, two 4-pole relays, CPT, and terminal blocks. Also includes space for a DNA module or MOV.

⑦ Same as footnote ⑥, but CPT is not included. Upsize to 7A enclosure to include space for a CPT and a full voltage bypass contactor.

⑧ Enclosure may be reduced to an A1, with all space for all items as in footnote ⑥, excluding relays and CPTs.

⑨ Same as footnote ⑥, but CPT is not included. Upsize to B1 enclosure to include space for a CPT and a full voltage bypass contactor.

Note: See *Enclosed Control Product Focus* for Box Dimensions for Type 1, 3R, 4X, 7/9 and 12.

Options ..... **Page 26**
Cover Control ..... **Page 26**
Accessories ..... **Page 19**
Technical Data ..... **Page 21**

Eaton Corporation
Electrical Group
1000 Cherrington Parkway
Moon Township, PA 15108
United States
877-ETN CARE (877-386-2273)
Eaton.com

© 2007 Eaton Corporation
All Rights Reserved
Printed in USA
Publication No. CA03902004E/CPG
April 2007